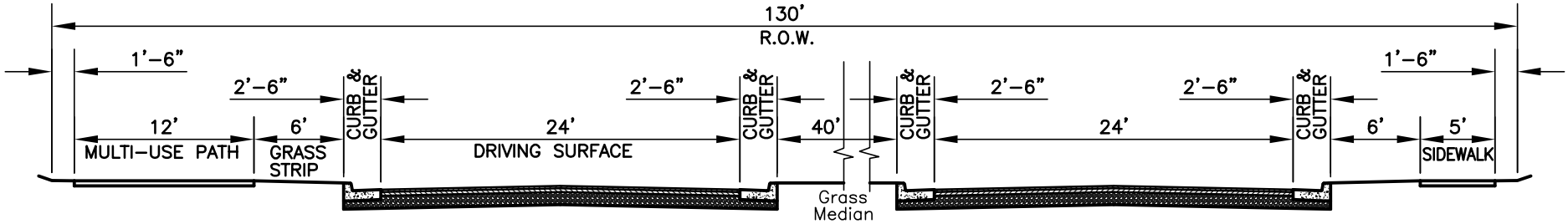

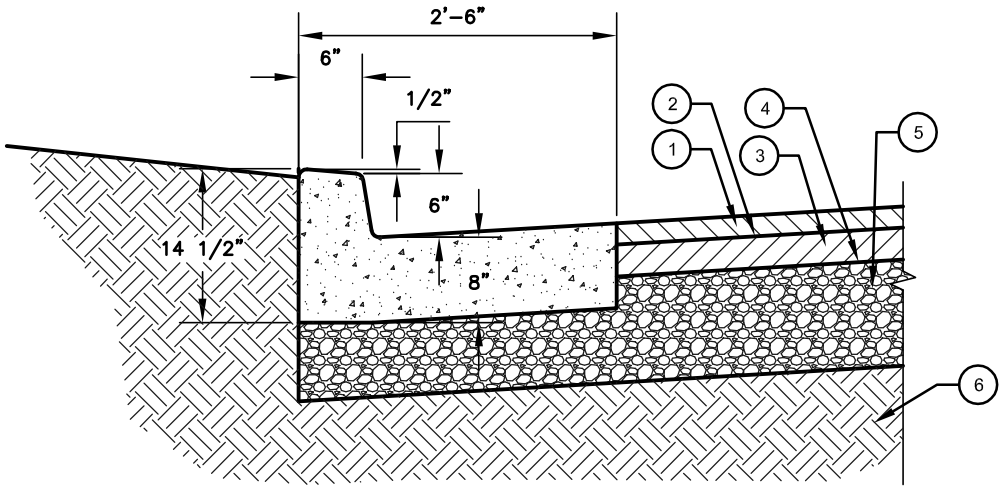

MINIMUM REQUIREMENTS:

1. 2" ASPHALTIC CONCRETE SURFACE (GRADING E) ITEM NO. 411-01.11
2. TACK COAT (RS-2) ITEM NO. 403-01
3. 3" ASPHALTIC CONCRETE BASE (GRADING B) ITEM NO. 307-01.06
4. PRIME COAT (AE-P) ITEM NO. 402-01
5. 10" STONE (GRADING D PUG MILL MIX) ITEM NO. 303-01
6. APPROVED COMPACTED SUBGRADE

ITEM NUMBERS ARE TO MEET TDOT SPECIFICATIONS

Notes:

Additional right-of-way may be required near intersections.

Elements of this typical section may be revised if approved by the City Engineer.

CITY OF COLUMBIA TENNESSEE

MAJOR ARTERIAL 130' R.O.W.

(NTS)

DATE
4-23-2012

DWG. NO.
SD-01

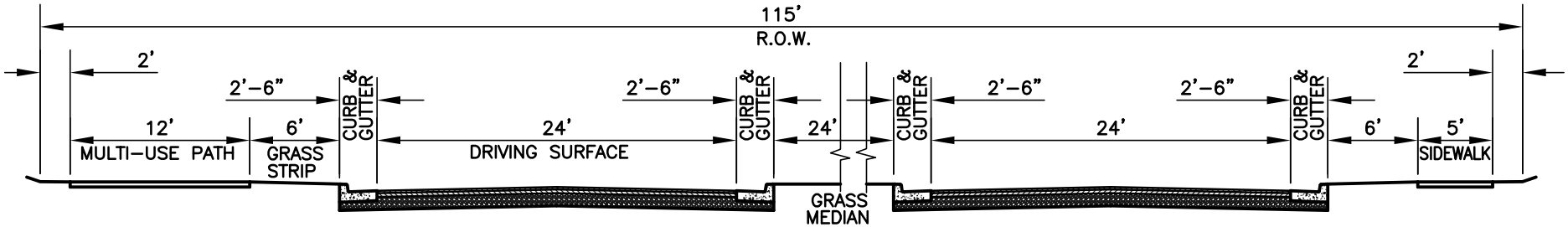

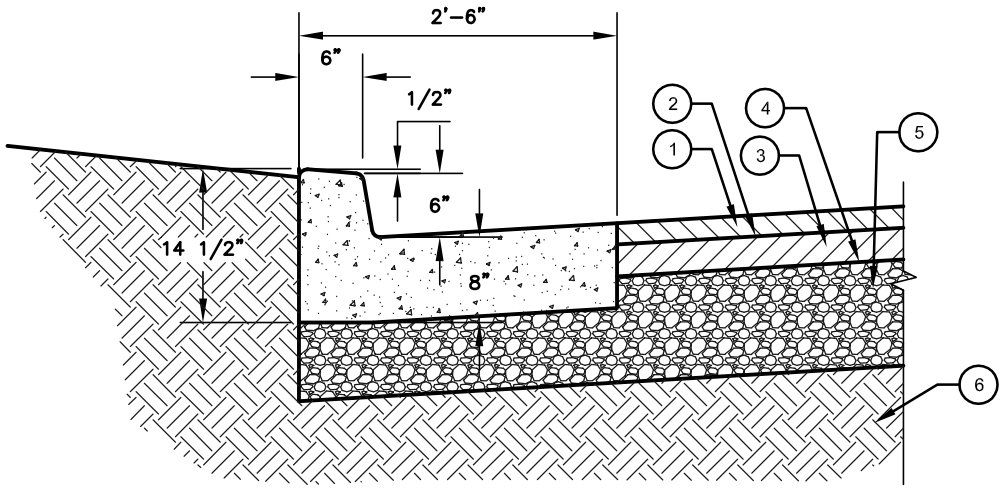

MINIMUM REQUIREMENTS:

1. 2" ASPHALTIC CONCRETE SURFACE (GRADING E) ITEM NO. 411-01.11
2. TACK COAT (RS-2) ITEM NO. 403-01
3. 3" ASPHALTIC CONCRETE BASE (GRADING B) ITEM NO. 307-01.06
4. PRIME COAT (AE-P) ITEM NO. 402-01
5. 10" STONE (GRADING D PUG MILL MIX) ITEM NO. 303-01
6. APPROVED COMPACTED SUBGRADE

ITEM NUMBERS ARE TO MEET TDOT SPECIFICATIONS

Notes:

Additional right-of-way may be required near intersections.

Elements of this typical section may be revised if approved by the City Engineer.

CITY OF COLUMBIA TENNESSEE

MAJOR COLLECTOR/ MINOR ARTERIAL - 115' R.O.W.

(NTS)

DATE
4-23-2012

DWG. NO.
SD-02

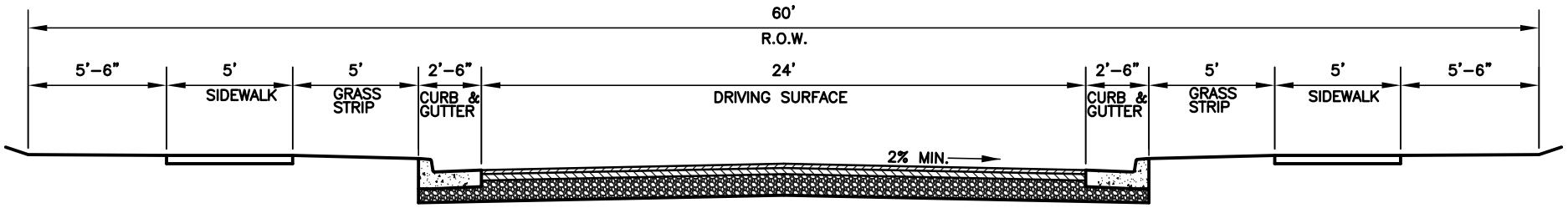

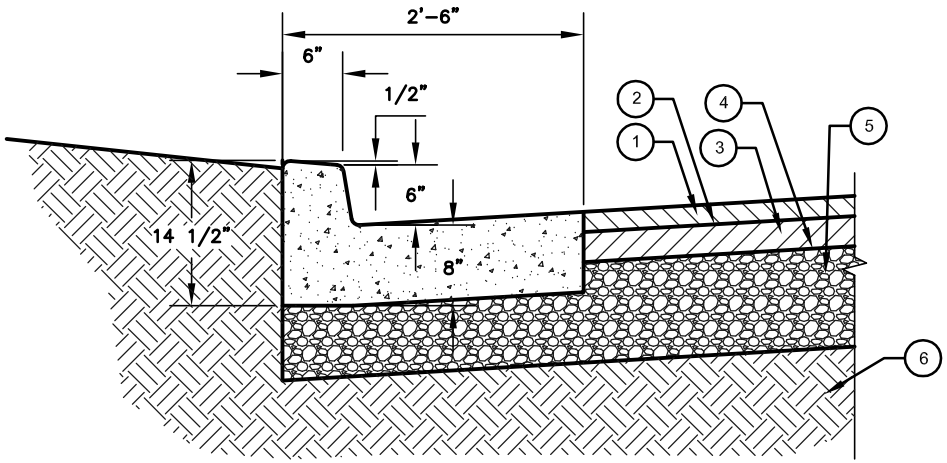

MINIMUM REQUIREMENTS:

1. 1 1/2" ASPHALTIC CONCRETE SURFACE (GRADING E) ITEM NO. 411-01.11
2. TACK COAT (RS-2) ITEM NO. 403-01
3. 2" ASPHALTIC CONCRETE BASE (GRADING B) ITEM NO. 307-01.06
4. PRIME COAT (AE-P) ITEM NO. 402-01
5. 10" STONE (GRADING D PUG MILL MIX) ITEM NO. 303-01
6. APPROVED COMPACTED SUBGRADE

ITEM NUMBERS ARE TO MEET TDOT SPECIFICATIONS

Notes:

Additional right-of-way may be required near intersections.

Elements of this typical section may be revised if approved by the City Engineer.

CITY OF COLUMBIA TENNESSEE

MINOR COLLECTOR

(NTS)

DATE
4-23-2012

DWG. NO.
SD-03

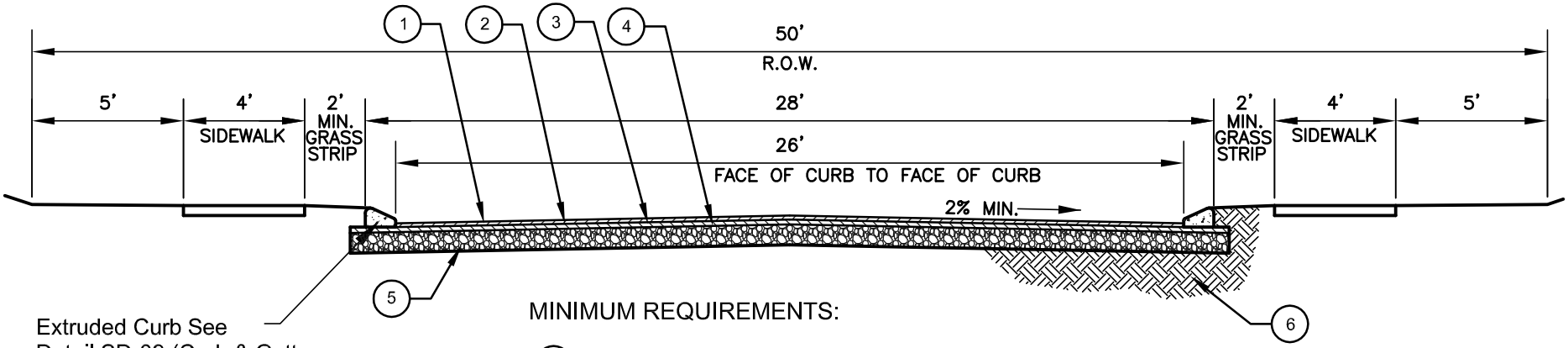

Extruded Curb See Detail SD-09 (Curb & Gutter may be used in place of Extruded Curb See Detail SD-10)

MINIMUM REQUIREMENTS:

1. 1 1/2" ASPHALTIC CONCRETE SURFACE (GRADING E) ITEM NO. 411-01.11
2. TACK COAT (RS-2) ITEM NO. 403-01
3. 2" ASPHALTIC CONCRETE BASE (GRADING B) ITEM NO. 307-01.06
4. PRIME COAT (AE-P) ITEM NO. 402-01
5. 8" STONE (GRADING D PUG MILL MIX) ITEM NO. 303-01
6. APPROVED COMPACTED SUBGRADE

ITEM NUMBERS ARE TO MEET TDOT SPECIFICATIONS

Notes:

Additional right-of-way may be required near intersections.

Elements of this typical section may be revised if approved by the City Engineer.

CITY OF COLUMBIA TENNESSEE

RESIDENTIAL LOCAL STREET

(NTS)

DATE
9-10-2014

DWG. NO.
SD-04

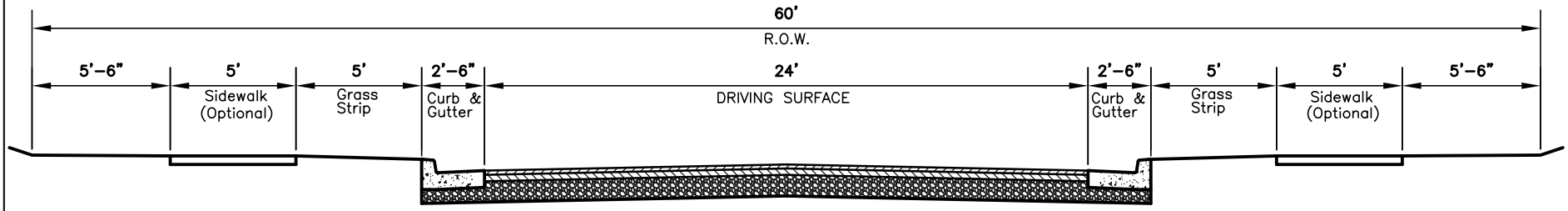

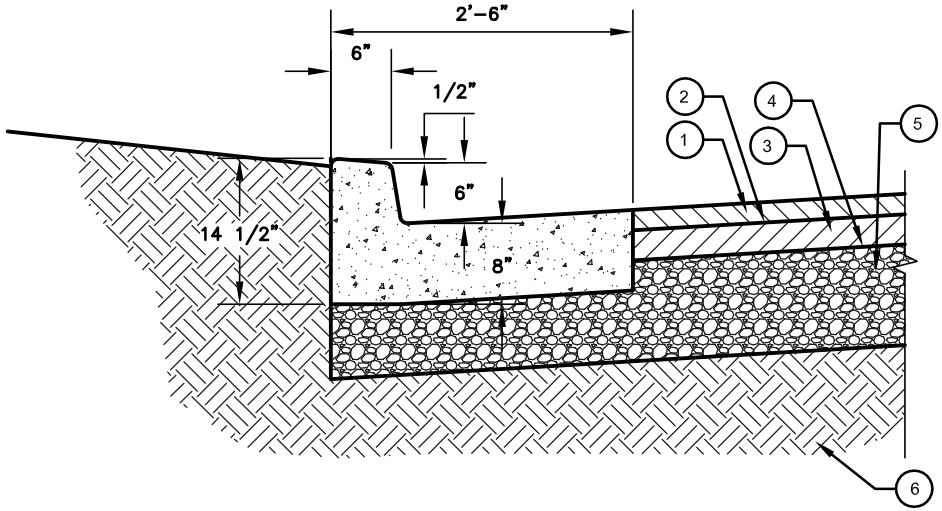

MINIMUM REQUIREMENTS:

1. 2" ASPHALTIC CONCRETE SURFACE (GRADING E) ITEM NO. 411-01.11
2. TACK COAT (RS-2) ITEM NO. 403-01
3. 3" ASPHALTIC CONCRETE BASE (GRADING B) ITEM NO. 307-01.06
4. PRIME COAT (AE-P) ITEM NO. 402-01
5. 10" STONE (GRADING D PUG MILL MIX) ITEM NO. 303-01
6. APPROVED COMPACTED SUBGRADE

ITEM NUMBERS ARE TO MEET TDOT SPECIFICATIONS

Notes:

Additional right-of-way may be required near intersections.

Sidewalks are optional on Industrial streets.

Elements of this typical section may be revised if approved by the City Engineer.

CITY OF COLUMBIA TENNESSEE

INDUSTRIAL / COMMERCIAL STREET

(NTS)

DATE
4-23-2012

DWG. NO.
SD-05

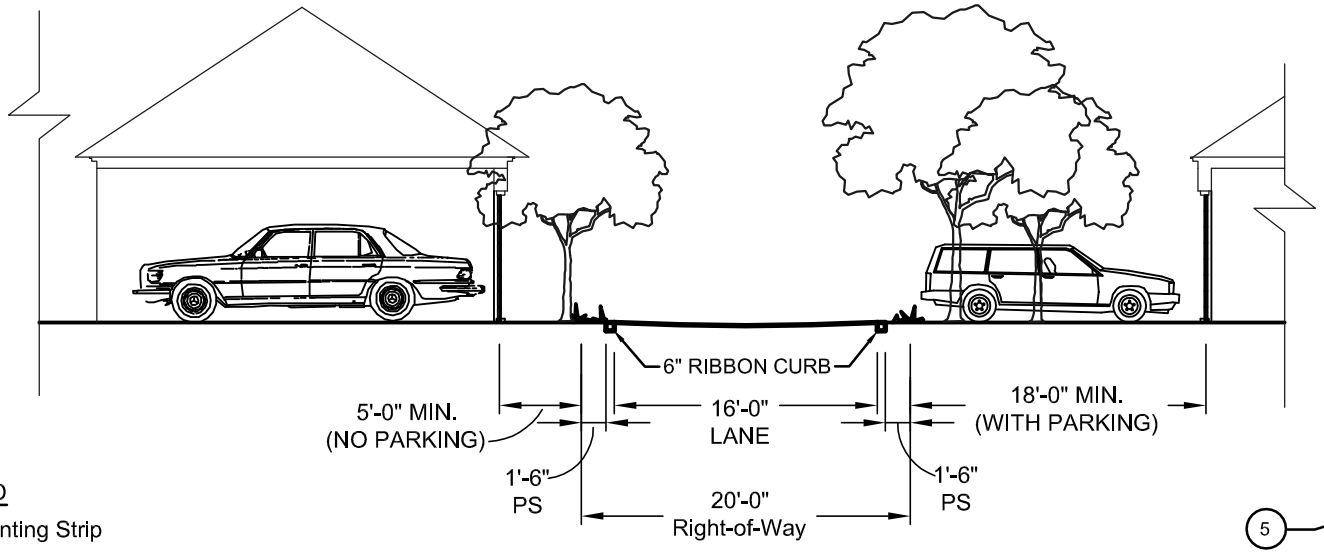

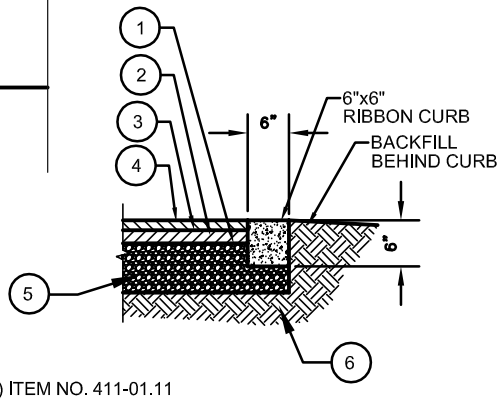

LEGEND

PS - Planting Strip

Notes:

Setback may be either 5' distance from right-of-way OR 18' min. Distances between 5-18' are not allowed to discourage parking that could block alley access.

General Notes:

1. Expansion joints to be spaced a maximum of 100 feet apart and align with ramps, inlets and other required target points.

2. Contraction/construction joints are required and are to be cut into curb every 10 feet.

3. The 6" ribbon curb is to be used only in special conditions such as alleys.

MINIMUM REQUIREMENTS:

1. 1 1/2" ASPHALTIC CONCRETE SURFACE (GRADING E) ITEM NO. 411-01.11
2. TACK COAT (RS-2) ITEM NO. 403-01
3. 2" ASPHALTIC CONCRETE BASE (GRADING B) ITEM NO. 307-01.06
4. PRIME COAT (AE-P) ITEM NO. 402-01
5. 8" STONE (GRADING D PUG MILL MIX) ITEM NO. 303-01
6. APPROVED COMPACTED SUBGRADE

ITEM NUMBERS ARE TO MEET TDOT SPECIFICATIONS

Notes:

Additional right-of-way may be required near intersections.

Elements of this typical section may be revised if approved by the City Engineer.

CITY OF COLUMBIA TENNESSEE

STANDARD ALLEY SECTION

(NTS)

DATE
4-23-2012

DWG. NO.
SD-06

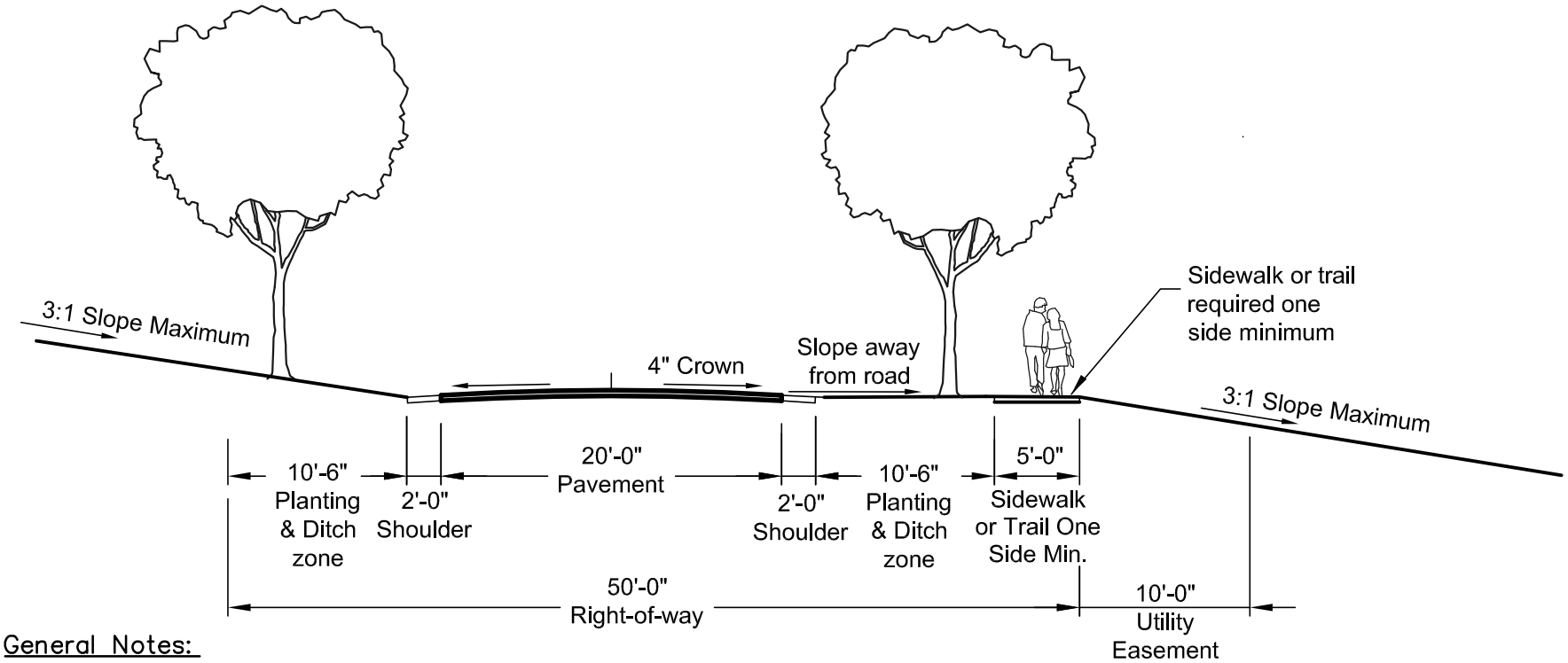

General Notes:

1. A professional engineer licensed in the state of Tennessee is required to provide a pavement section appropriate for each specific use and conditions.

2. Streets shall meet the standards as set forth in the latest version of the Tennessee Department of Transportation Roadway Design Guidelines.

3. Streets without curbs are permitted only in conservation subdivisions or along dedicated park space.

Notes:

Additional right-of-way may be required near intersections.

Elements of this typical section may be revised if approved by the City Engineer.

CITY OF COLUMBIA TENNESSEE

CONSERVATION STREET SECTION

(NTS)

DATE
4-23-2012

DWG. NO.
SD-07

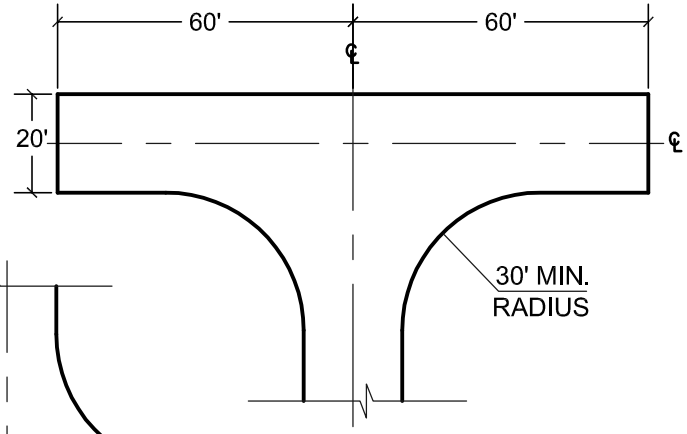

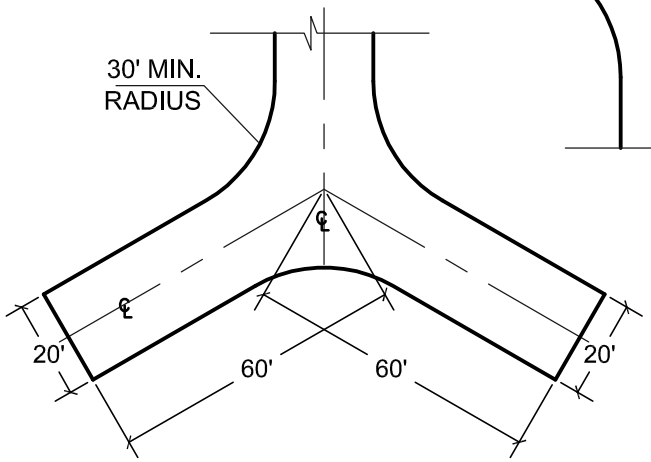

Any Angle From 90° To 180° Is Acceptable Provided The Specified Lengths And Radii Are Maintained

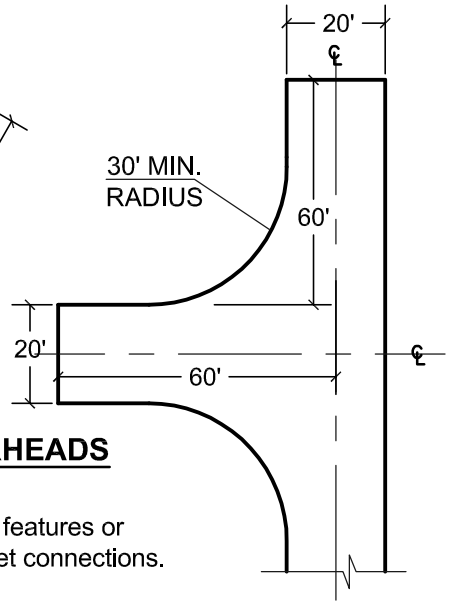

HAMMERHEADS

Notes:

1. Cul-de-sacs shall be permitted where topographic features or configuration of property boundaries prevent street connections.

2. Temporary Cul-de-sacs shall be the same size as above, and shall be constructed of base stone and binder, but curbing and asphalt surface may be excluded.

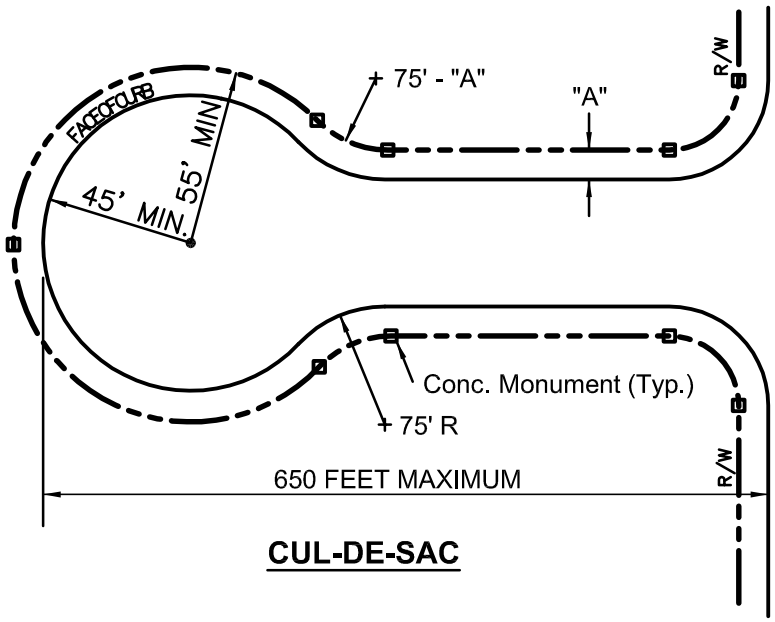

CUL-DE-SAC

Notes:

1. Turnaround facilities cannot be located on driveways.

2. All street ends shall be signed as required.

3. Additional right-of-way may be required near intersections.

4. Elements of this typical section may be revised if approved by the City Engineer.

CITY OF COLUMBIA TENNESSEE

TURN-A-ROUND DETAIL

(NTS)

DATE
9-9-2015

DWG. NO.
SD-08

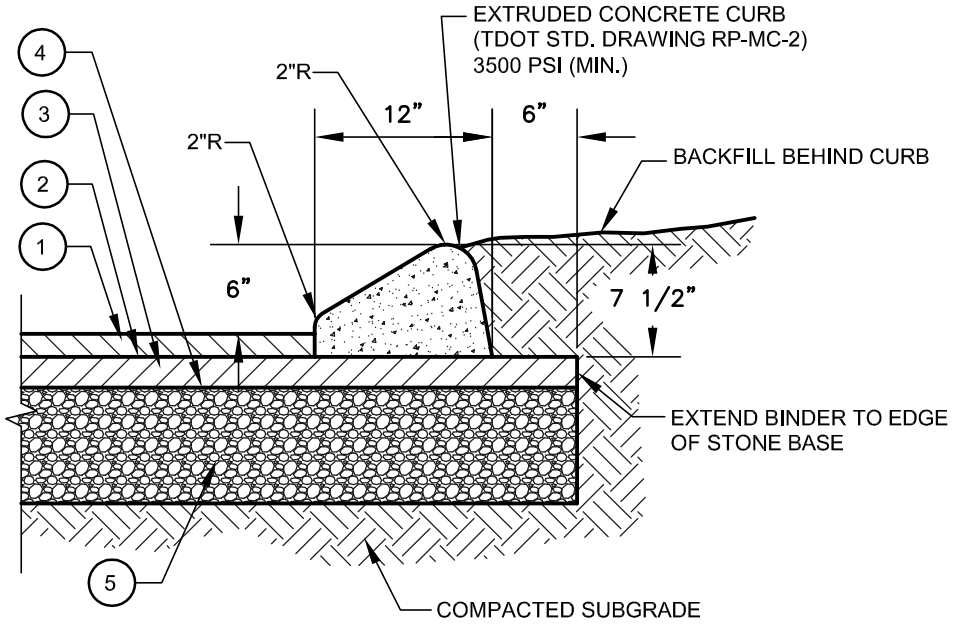

1. 1 1/2" ASPHALTIC CONCRETE SURFACE (GRADING E) ITEM NO. 411-01.11
2. TACK COAT (RS-2) ITEM NO. 403-01
3. 2" ASPHALTIC CONCRETE BASE (GRADING B) ITEM NO. 307-01.06
4. PRIME COAT (AE-P) ITEM NO. 402-01
5. 8" STONE (GRADING D PUG MILL MIX) ITEM NO. 303-01

ITEM NUMBERS ARE TO MEET TDOT SPECIFICATIONS

General Notes:

1. Expansion joints to be spaced a maximum of 100 feet apart and align with ramps, inlets and other required target points.
2. Contraction/construction joints are required and are to be cut into curb every 10 feet.
3. Details shall meet the standards as set forth in the latest version of the Tennessee Department of Transportation Roadway Design Guidelines.
4. The extruded 6" mountable concrete curb is to be used only in special conditions such as low speed low volume local streets and when tying to similar curbs on subdivision streets or in parking lots.
5. Where concrete median pavement is poured behind extruded 6" mountable concrete curb, it may be poured monolithically with the curb.

CITY OF COLUMBIA TENNESSEE

MOUNTABLE CURB DETAIL

(NTS)

DATE
4-23-2012

DWG. NO.
SD-09

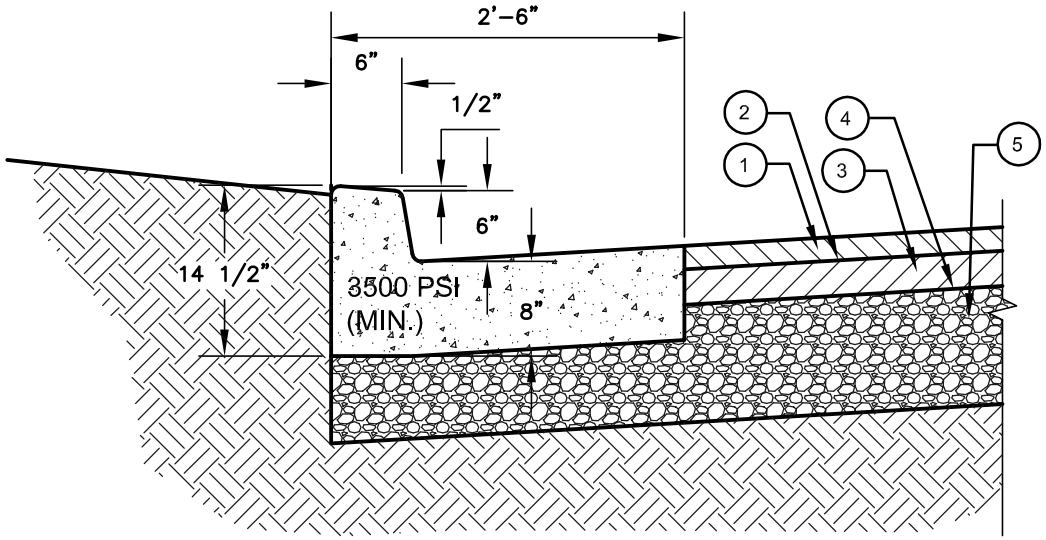

1. 2" ASPHALTIC CONCRETE SURFACE (GRADING E) ITEM NO. 411-01.11
2. TACK COAT (RS-2) ITEM NO. 403-01
3. 3" ASPHALTIC CONCRETE BASE (GRADING B) ITEM NO. 307-01.06
4. PRIME COAT (AE-P) ITEM NO. 402-01
5. 10" STONE (GRADING D PUG MILL MIX) ITEM NO. 303-01

ITEM NUMBERS ARE TO MEET TDOT SPECIFICATIONS

General Notes:

1. Expansion joints to be spaced a maximum of 100 feet apart and align with ramps, inlets and other required target points.

2. Contraction joints are required and are to be cut into curb every 10 feet.

3. Details shall meet the standards as set forth in the latest version of the Tennessee Department of Transportation Roadway Design Guidelines.

CITY OF COLUMBIA TENNESSEE

CURB & GUTTER SECTION

(NTS)

DATE
4-23-2012

DWG. NO.
SD-10

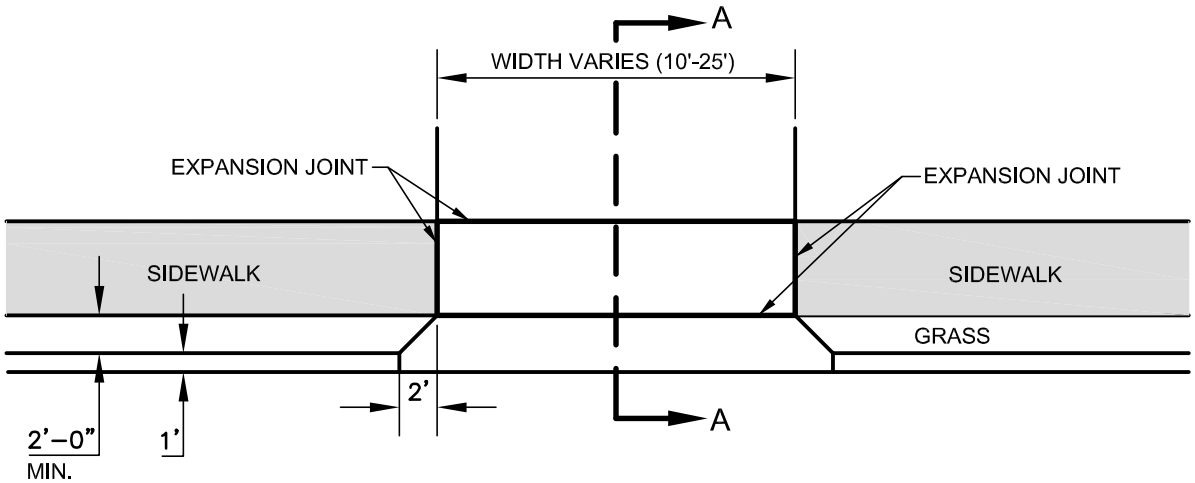

PLAN

ALL RESIDENTIAL DRIVE APRONS SHALL BE CONSTRUCTED OF 3500 PSI CONCRETE. FROM THE BACK OF THE APRON THE DRIVE SHALL BE EITHER CONCRETE OR ASPHALT.

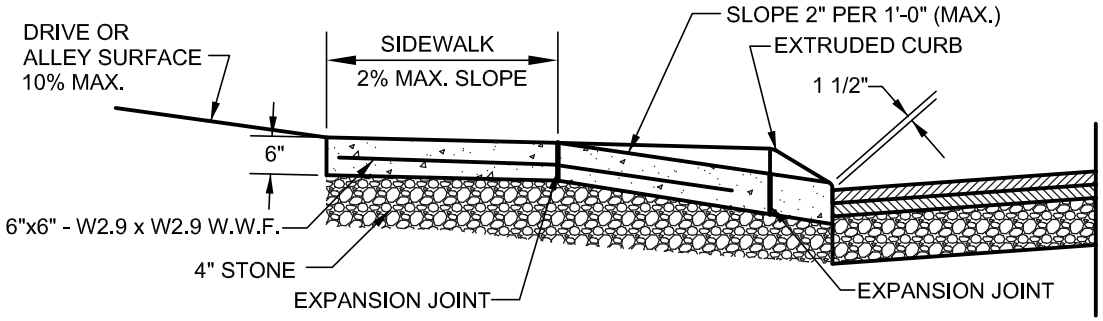

SECTION A-A

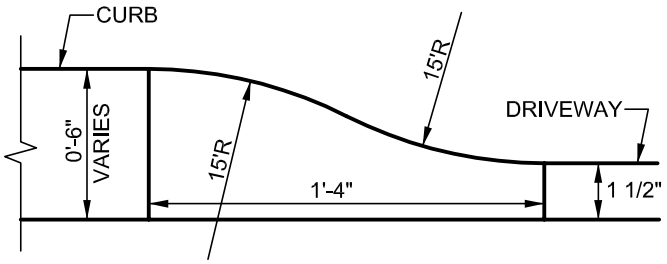

TYPICAL CURB TO DRIVE TRANSITION

Notes:

Additional right-of-way may be required near intersections.

Elements of this typical section may be revised if approved by the City Engineer.

CITY OF COLUMBIA TENNESSEE

DRIVEWAY APRON (RESIDENTIAL)

(NTS)

DATE
4-23-2012

DWG. NO.
SD-11

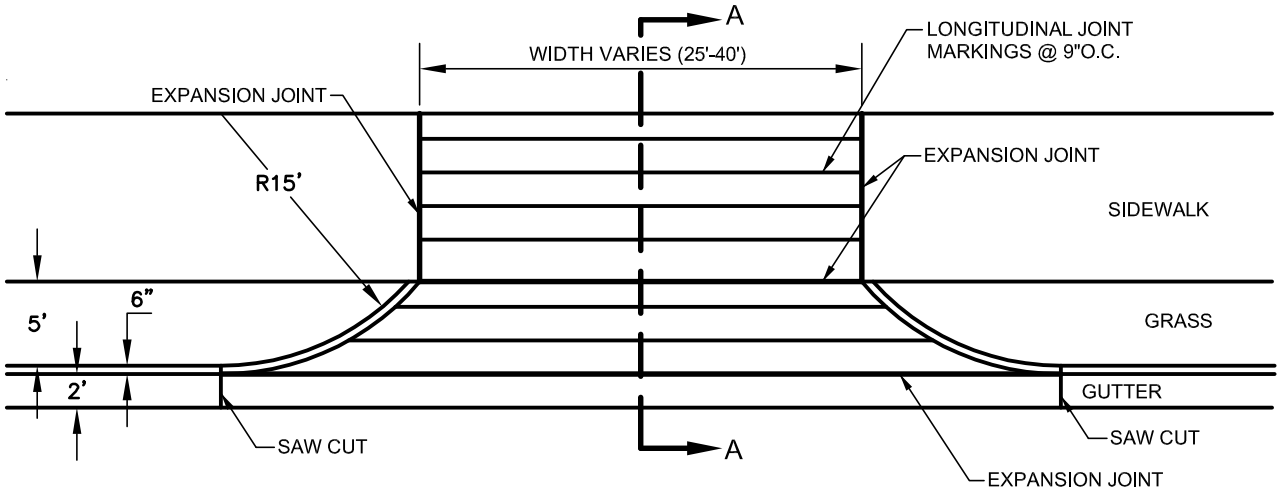

PLAN

ALL COMMERCIAL DRIVE APRONS SHALL BE CONSTRUCTED OF 3500 PSI CONCRETE. FROM THE BACK OF THE APRON THE DRIVE SHALL BE EITHER CONCRETE OR ASPHALT.

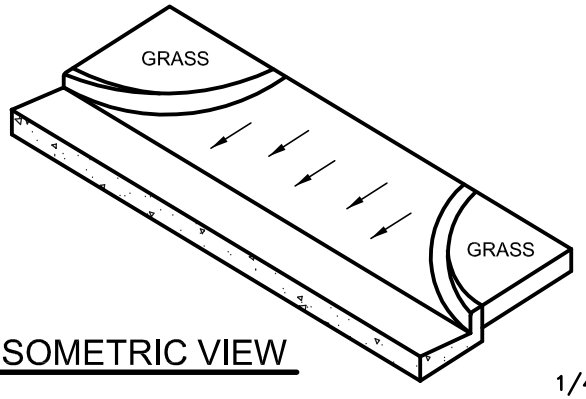

ISOMETRIC VIEW

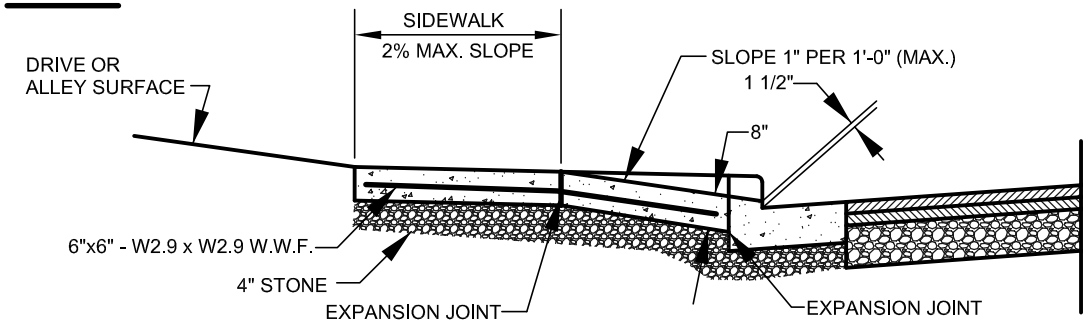

SECTION A-A

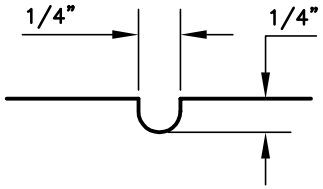

TYPICAL LONGITUDINAL JOINT MARKING

CITY OF COLUMBIA TENNESSEE

DRIVEWAY APRON (COMMERCIAL)

(NTS)

DATE
4-23-2012

DWG. NO.
SD-12

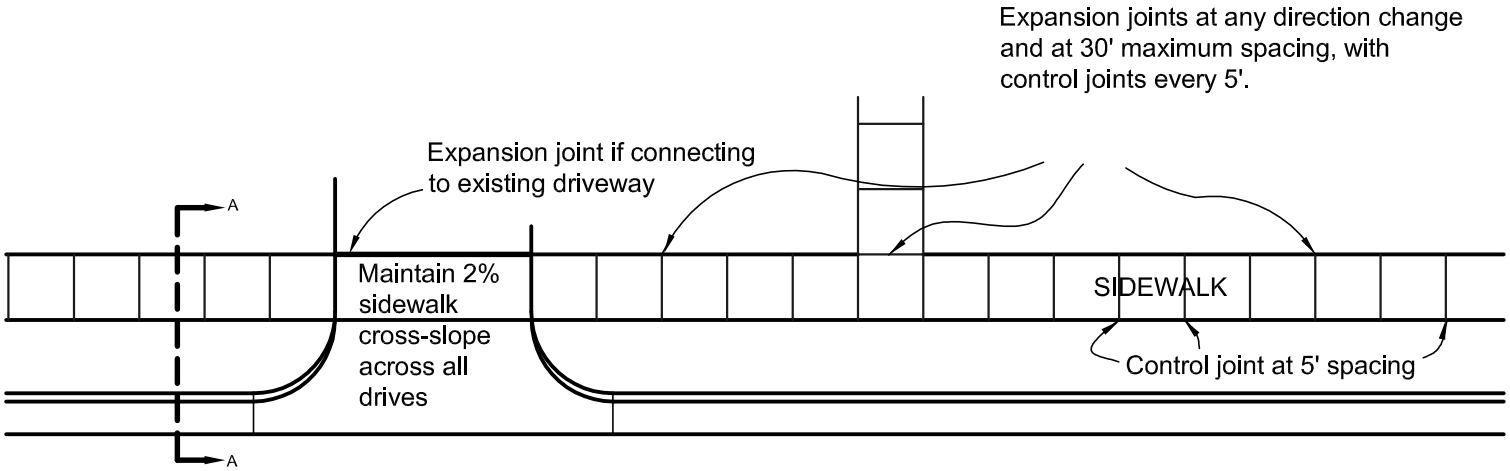

PLAN VIEW

Not to Scale

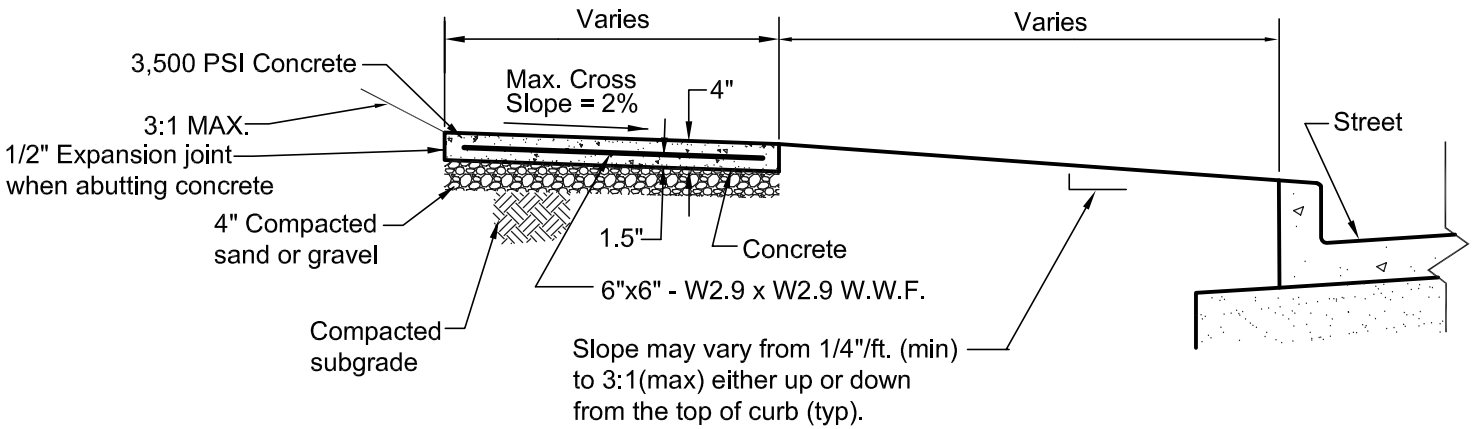

SECTION A-A

Not to Scale

CITY OF COLUMBIA TENNESSEE

SIDEWALK DETAIL

(NTS)

DATE
4-23-2012

DWG. NO.
SD-13

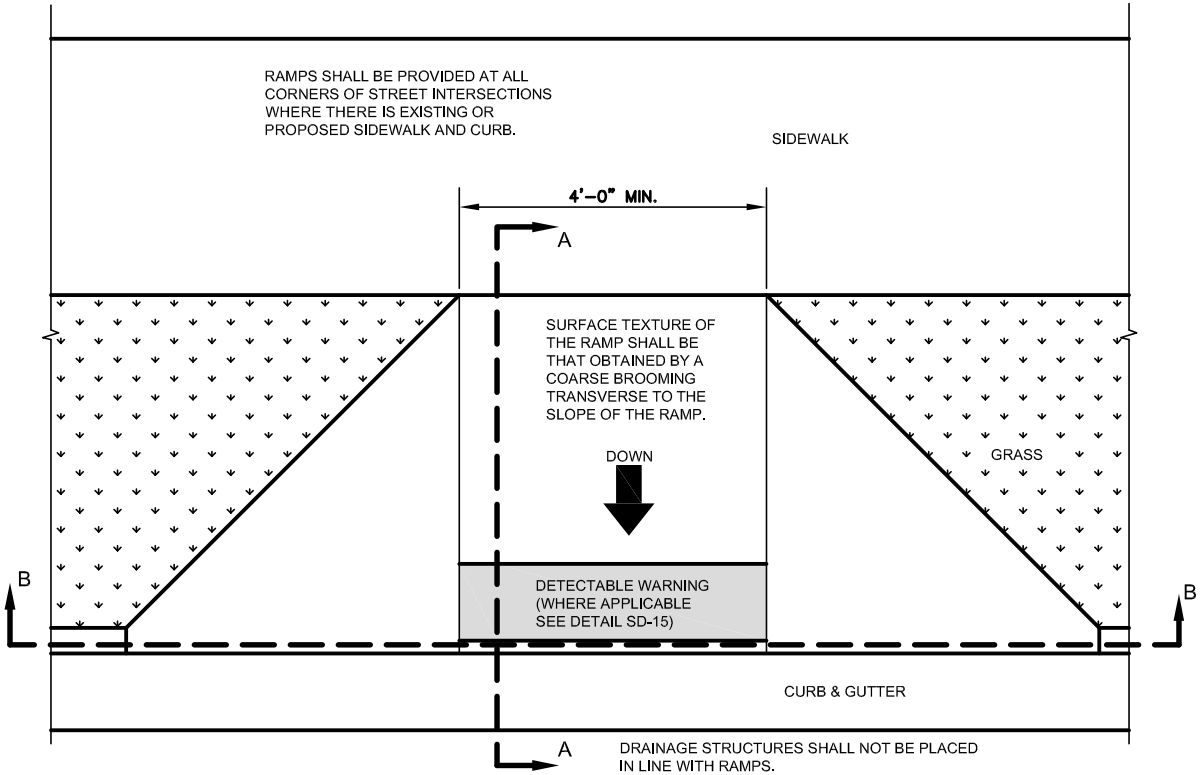

NOTES:

1. DETAILS SHOWN ON THIS PLAN APPLY TO ALL NEW CONSTRUCTION OR RECONSTRUCTION OF STREETS, CURBS, OR SIDEWALKS.
2. DESIRABLE SLOPE TO BE USED UNLESS OTHERWISE DIRECTED BY THE CITY ENGINEER.
3. MINIMUM LANDING AT TOP OF RAMP IS 5'.
4. ALL CONSTRUCTION SHALL MEET CURRENT ADA STANDARDS.
5. WIDTH OF HANDICAP RAMP SIDE FLARES MAY VARY WHERE THERE IS NO SIDE ACCESS TO THE RAMP.

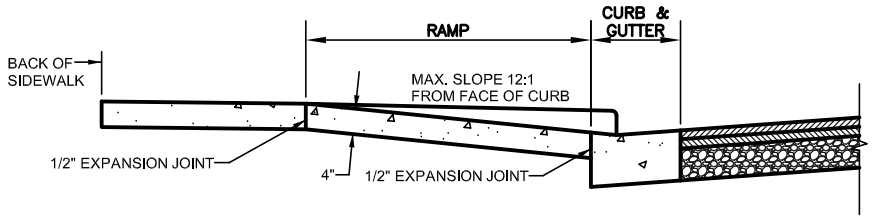

CARE SHALL BE TAKEN TO ASSURE A UNIFORM GRADE ON THE RAMP, FREE OF SAGS AND SHORT GRADE CHANGES. THE NORMAL GUTTER LINE PROFILE SHALL BE MAINTAINED THROUGH THE AREA OF THE RAMP.

SECTION A-A

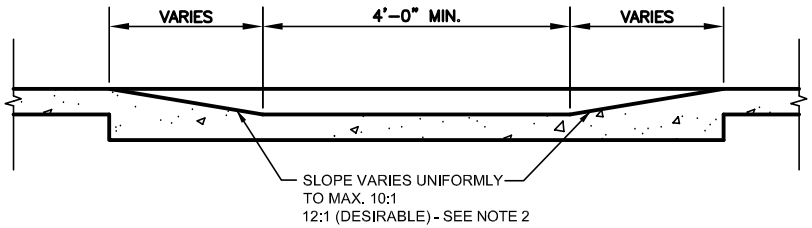

SECTION B-B

CITY OF COLUMBIA TENNESSEE

HANDICAP RAMP

(NTS)

DATE
4-23-2012

DWG. NO.
SD-14

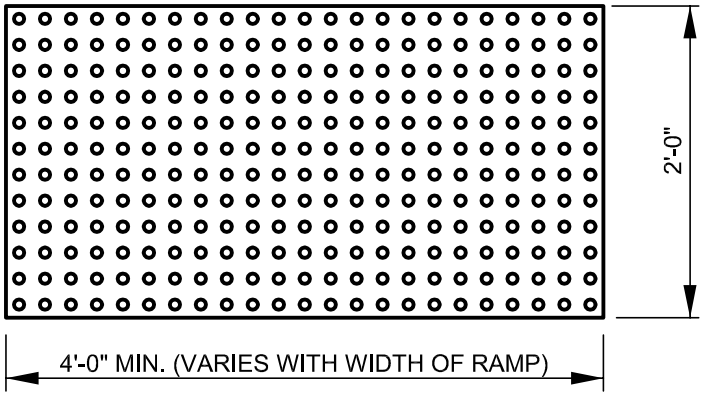

TRUNCATED DOME PLAN VIEW

NOTES:

1. DETECTABLE WARNINGS SHALL BE INSTALLED PER MANUFACTURERS SPECIFICATIONS.

2. WIDTH OF DETECTABLE WARNING AREA SHALL BE A MINIMUM OF 4 FEET AND VARY WITH WIDTH OF RAMP.

3. LENGTH OF DETECTABLE WARNING AREA SHALL BE 2 FEET REGARDLESS OF SECTION WIDTH.

4. DETECTABLE WARNING DOMES SHALL BE ALIGNED ON A SQUARE GRID IN THE PREDOMINANT DIRECTION OF TRAVEL TO PERMIT WHEELS TO ROLL BETWEEN THE DOMES.

5. THE MATERIAL USED TO PROVIDE CONTRAST SHALL BE AN INTEGRAL PART OF THE WALKING SURFACE.

6. DETECTABLE WARNINGS USED ON INTERIOR SURFACES SHALL DIFFER FROM ADJOINING WALKING SURFACES IN RESILIENCY OR SOUND-ON-CANE CONTACT.

7. THE MATERIAL USED TO PROVIDE CONTRAST SHOULD CONTRAST BY AT LEAST 70%. CONTRAST IN PERCENT IS DETERMINED BY:

CONTRAST = [(B1-B2)/B1] x 100

WHERE B1 = LIGHT REFLECTANCE VALUE (LRV) OF THE LIGHTER AREA AND B2 = LIGHT REFLECTANCE VALUE (LRV) OF THE DARKER AREA.
(NOTE THAT IN ANY APPLICATION BOTH WHITE AND BLACK ARE NEVER ABSOLUTE: THUS, B1 NEVER EQUALS 100 AND B2 IS ALWAYS GREATER THAN 0.

8. ALL MATERIALS AND WORKMANSHIP SHALL MEET CURRENT ADA REQUIREMENTS.

CITY OF COLUMBIA TENNESSEE

DETECTABLE WARNING

(NTS)

DATE
4-23-2012

DWG. NO.
SD-15

TABLE 1.1 - STREET DESIGN STANDARDS a, b

	ARTERIAL		COLLECTOR			LOCAL	
	MAJOR	MINOR	MAJOR		MINOR	COMMERCIAL & INDUSTRIAL	RESIDENTIAL
			COMMERCIAL & INDUSTRIAL	RESIDENTIAL	RESIDENTIAL		
DESIGN SPEED/ POSTED SPEED (MPH)	50/45 MPH	45/40 MPH	40/35 MPH	40/35 MPH	35/30 MPH	30/25 MPH	30/25 MPH
RIGHT-OF-WAY WIDTH (c)	130 Ft.	115 Ft.	115 Ft.	115 Ft.	60 Ft.	60 Ft.	50 Ft.
NUMBER OF LANES	4-Lane Divided	4-Lane Divided	4-Lane Divided	4-Lane Divided	2-Lane	2-Lane	2-Lane
TRAFFIC LANE WIDTH	12 Ft.	12 Ft.	12 Ft.	12 Ft.	12 Ft.	12 Ft.	11 Ft.
MINIMUM HORIZONTAL CURVE RADIUS WITH NO SUPER-ELEVATION	1389 Ft.	1039 Ft.	762 Ft.	762 Ft.	510 Ft.	333 Ft.	333 Ft.
MAXIMUM GRADE (d) (e)	6%	7%	8%	10%	10%	8%	14%
STOPPING SIGHT DISTANCE	425 Ft.	360 Ft.	305 Ft.	305 Ft.	250 Ft.	200 Ft.	200 Ft.
"K" VALUE FOR CREST VERTICAL CURVE	84	61	44	44	29	19	19
"K" VALUE FOR SAG VERTICAL CURVE	96	79	64	64	49	37	37

(a) See standard drawing details for sidewalk locations, curb types, inlets and alley requirements.

(b) These dimensions may be increased or amended by the City Engineer as deemed necessary for safe and efficient street operation.

(c) Where fill or cut slopes or any other highway development must be included, additional Right-of-Way may be required.

(d) Minimum grade on any street shall be 1.00%.

(e) Maximum grade may be increased by the City Engineer if justified by existing conditions and assurance that the ease of access for emergency and service vehicles is received by appropriate City Staff.

CITY OF COLUMBIA TENNESSEE

STREET DESIGN STANDARDS

(NTS)

DATE
4-23-2012

DWG. NO.
SD-16

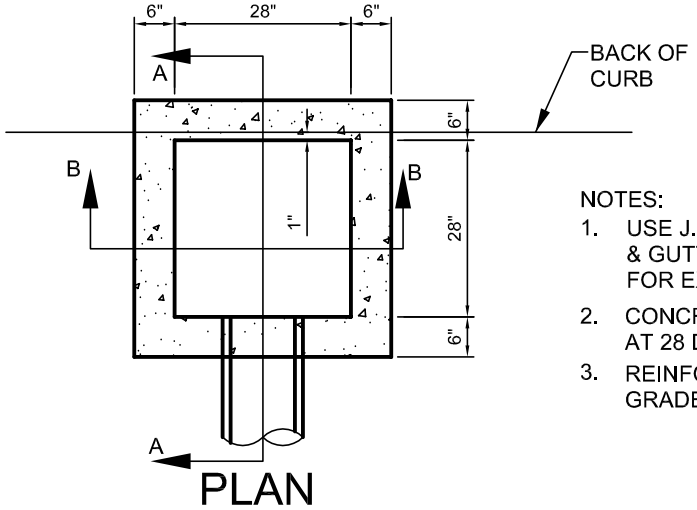

NOTES:

1. USE J.B. #3300V FOR 30" CURB & GUTTER AND J.B. #3103V FOR EXTRUDED CURB.
2. CONCRETE TO BE 4000 psi AT 28 DAYS.
3. REINFORCE WITH NO. 4 BARS GRADE 60.

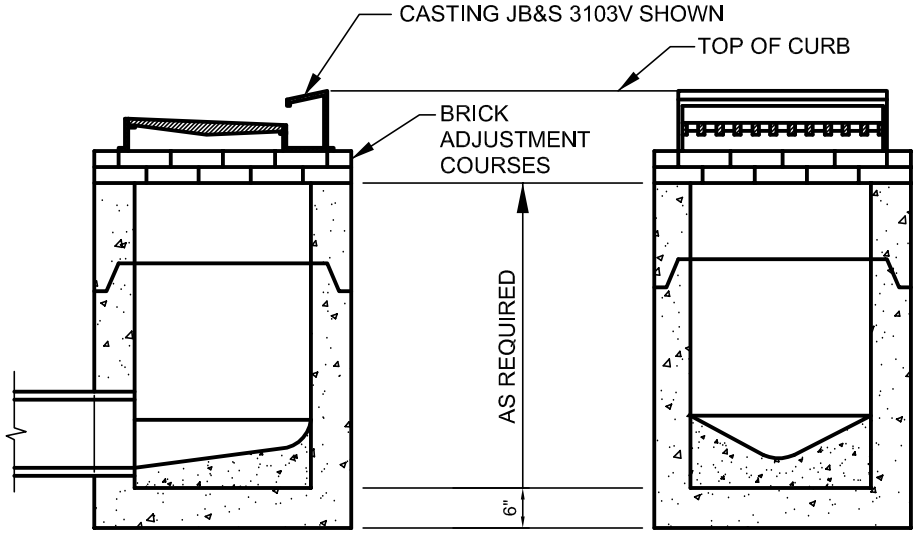

SECTION A-A

SECTION B-B

CITY OF COLUMBIA TENNESSEE

SINGLE GRATE CURB INLET

(NTS)

DATE
4-23-2012

DWG. NO.
DD-01

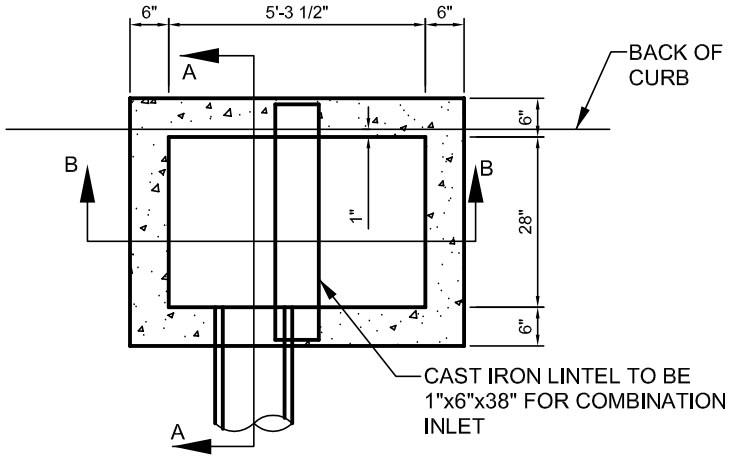

PLAN

NOTES:

1. USE J.B. #3300V FOR 30" CURB & GUTTER AND J.B. #3103V FOR EXTRUDED CURB.
2. CONCRETE TO BE 4000 psi AT 28 DAYS.
3. REINFORCE WITH NO. 4 BARS GRADE 60.

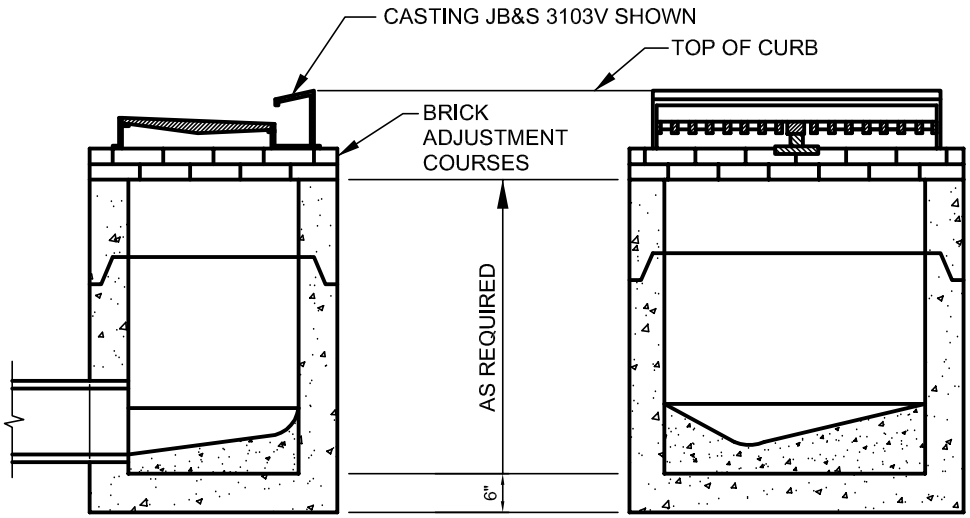

SECTION A-A

SECTION B-B

CITY OF COLUMBIA TENNESSEE

DOUBLE GRATE CURB INLET

(NTS)

DATE
4-23-2012

DWG. NO.
DD-02

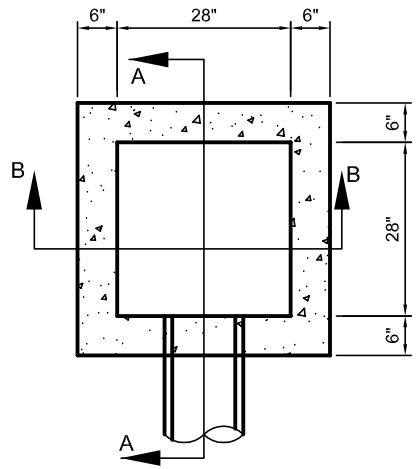

PLAN

NOTES:

1. CASTING SHALL BE JOHN BOUCHARD 4330 FRAME AND 4220 GRATE OR APPROVED EQUIVALENT.
2. CONCRETE TO BE 4000 psi AT 28 DAYS.
3. REINFORCE WITH NO. 4 BARS GRADE 60.

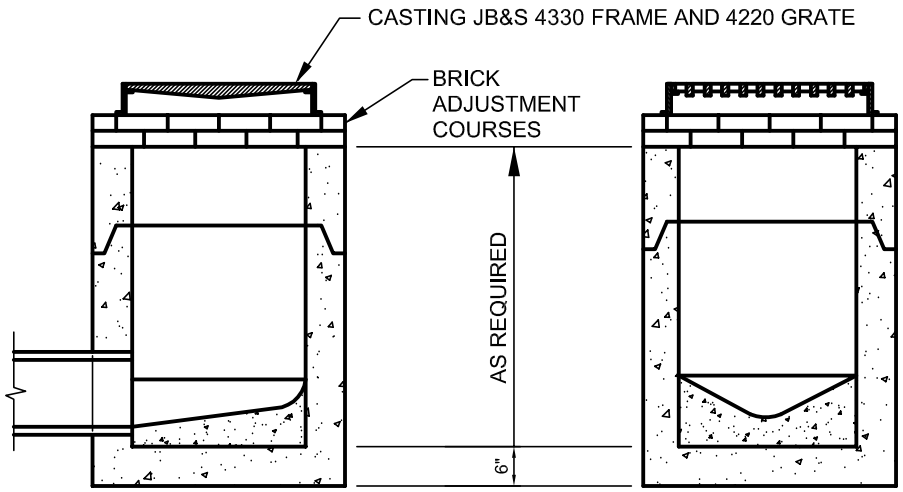

SECTION A-A

SECTION B-B

CITY OF COLUMBIA TENNESSEE

AREA DRAIN

(NTS)

DATE
4-23-2012

DWG. NO.
DD-03

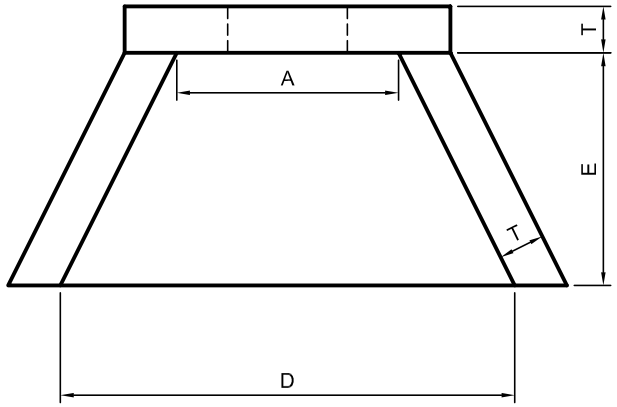

PLAN

TABLE OF DIMENSIONS					
PIPE SIZES	A	D	E	F	$T_{(MIN)}$
15"	2'-6"	5'-0"	2'-6"	1'-9"	6"
18"	2'-6"	5'-0"	2'-6"	1'-9"	6"
21"	2'-6"	5'-0"	2'-6"	1'-9"	6"
24"	4'-0"	6'-6"	3'-6"	3'-3"	6"
30"	4'-0"	6'-6"	3'-6"	3'-3"	6"
36"	5'-6"	8'-0"	3'-6"	4'-5"	6"
42"	5'-6"	8'-0"	4'-0"	4'-5"	6"
48"	5'-6"	8'-0"	4'-0"	4'-5"	6"

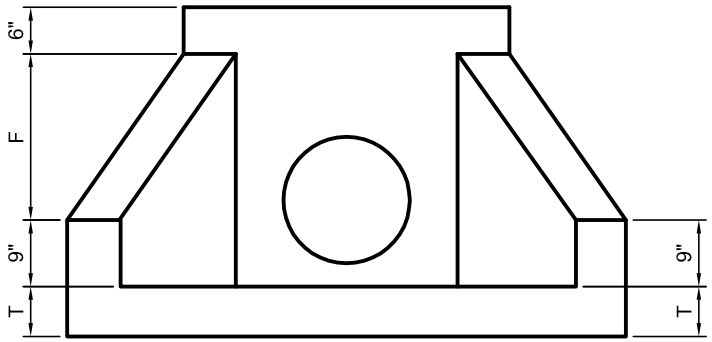

FRONT ELEVATION

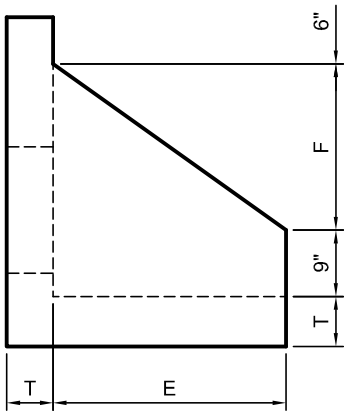

SIDE ELEVATION

CONCRETE: 4000 PSI AT 28 DAYS

REINFORCED WITH NO. 4 BARS 10" C-C EACH WAY WITH WINGS AND TOE SLAB DOWELLED TO HEADWALL WITH NO. 5 BARS

3/4" CHAMFER ON ALL EXPOSED EDGES

CITY OF COLUMBIA TENNESSEE

CONCRETE ENDWALL

(NTS)

DATE
4-23-2012

DWG. NO.
DD-04

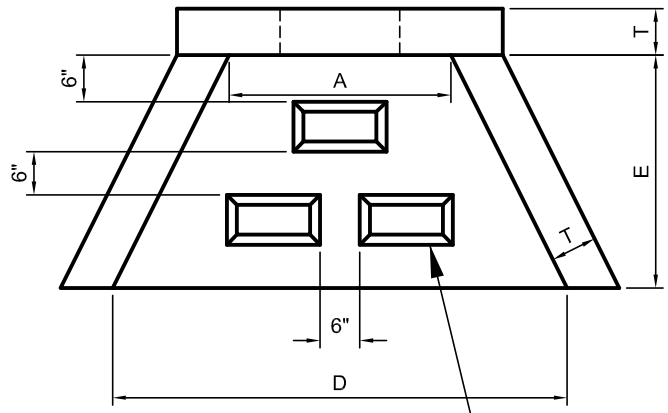

PLAN

12"x6"x12" H. ENERGY DISSIPATORS

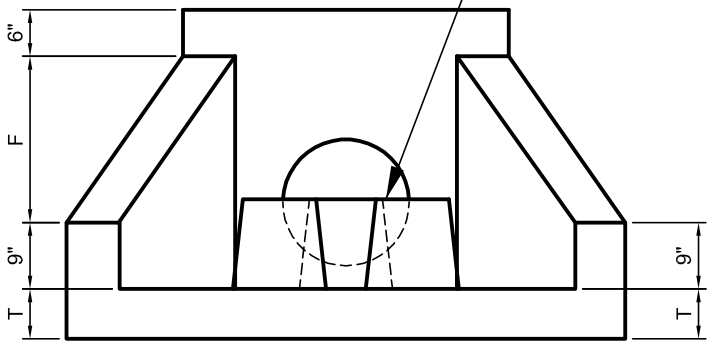

FRONT ELEVATION

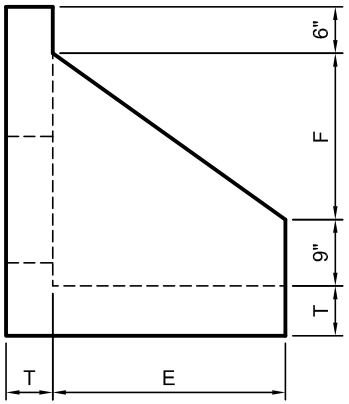

SIDE ELEVATION

TABLE OF DIMENSIONS					
PIPE SIZES	A	D	E	F	$T_{(MIN)}$
15"	2'-6"	5'-0"	2'-6"	1'-9"	6"
18"	2'-6"	5'-0"	2'-6"	1'-9"	6"
21"	2'-6"	5'-0"	2'-6"	1'-9"	6"
24"	4'-0"	6'-6"	3'-6"	3'-3"	6"
30"	4'-0"	6'-6"	3'-6"	3'-3"	6"

CONCRETE: 4000 PSI AT 28 DAYS

REINFORCED WITH NO. 4 BARS 10" C-C EACH WAY WITH WINGS AND TOE SLAB DOWELLED TO HEADWALL WITH NO. 5 BARS

3/4" CHAMFER ON ALL EXPOSED EDGES

CITY OF COLUMBIA TENNESSEE

CONCRETE ENDWALL WITH ENERGY DISSIPATION

(NTS)

DATE
4-23-2012

DWG. NO.
DD-05

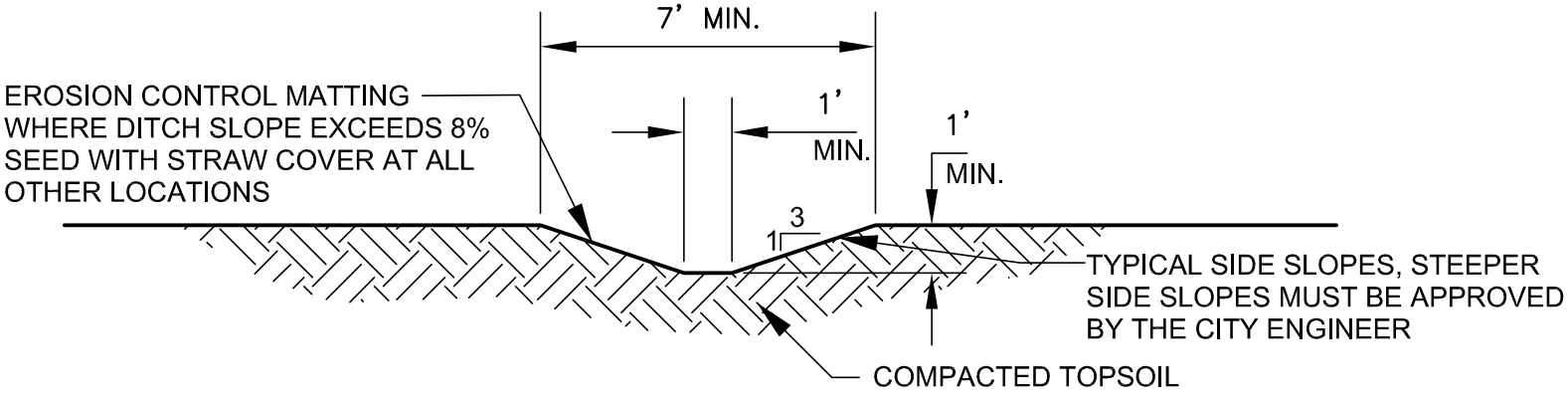

MINIMUM DITCH SLOPE = 1%

CITY OF COLUMBIA TENNESSEE

TRAPEZOIDAL DITCH SECTION

(NTS)

DATE
4-23-2012

DWG. NO.
DD-06

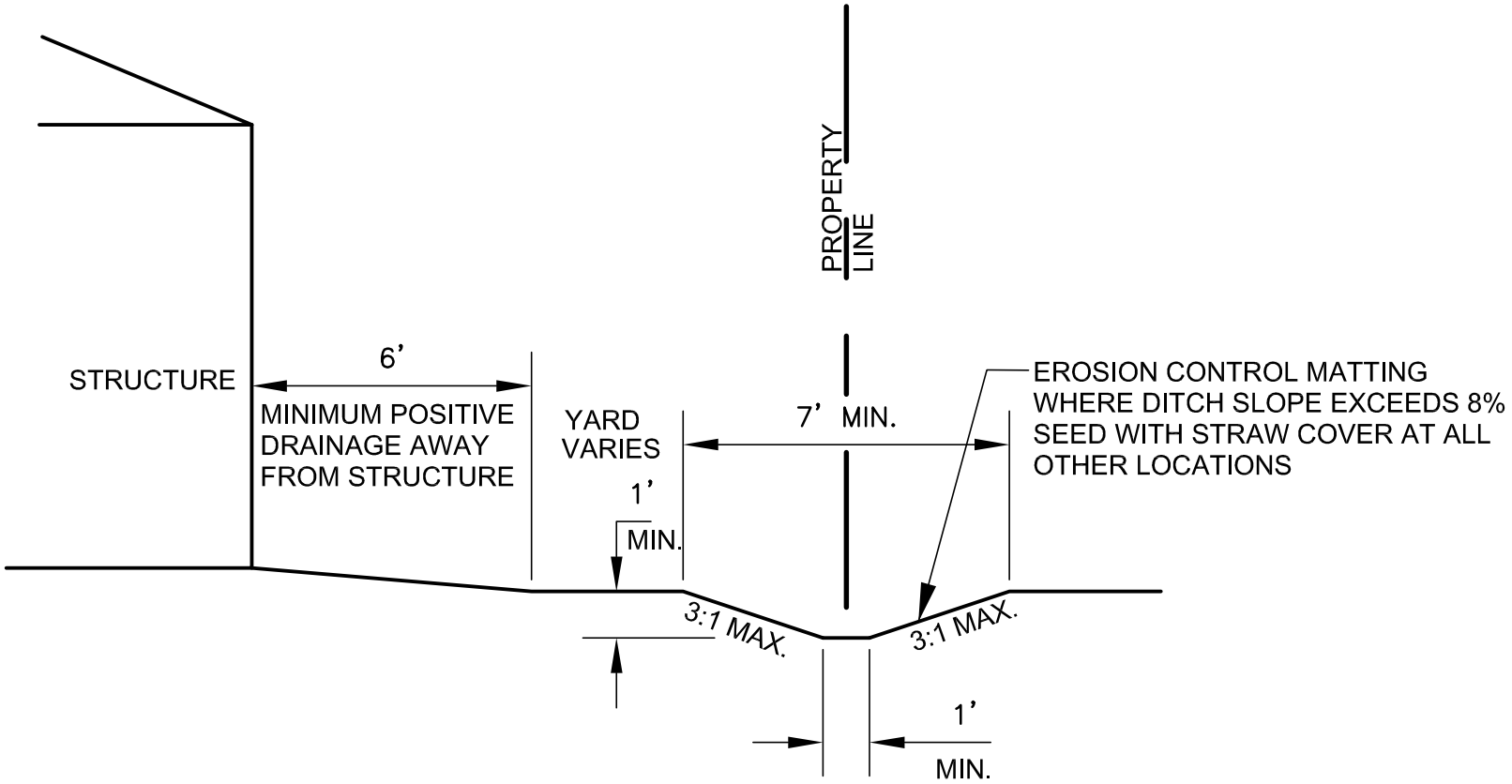

CITY OF COLUMBIA TENNESSEE

TYPICAL LOT SWALE

(NTS)

DATE
4-23-2012

DWG. NO.
DD-07

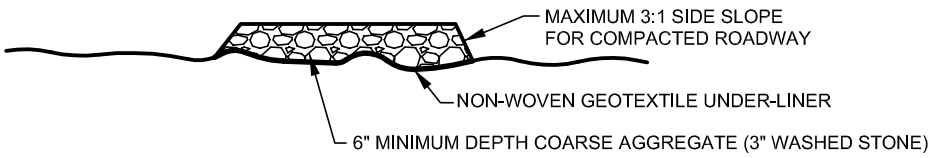

SECTION A-A

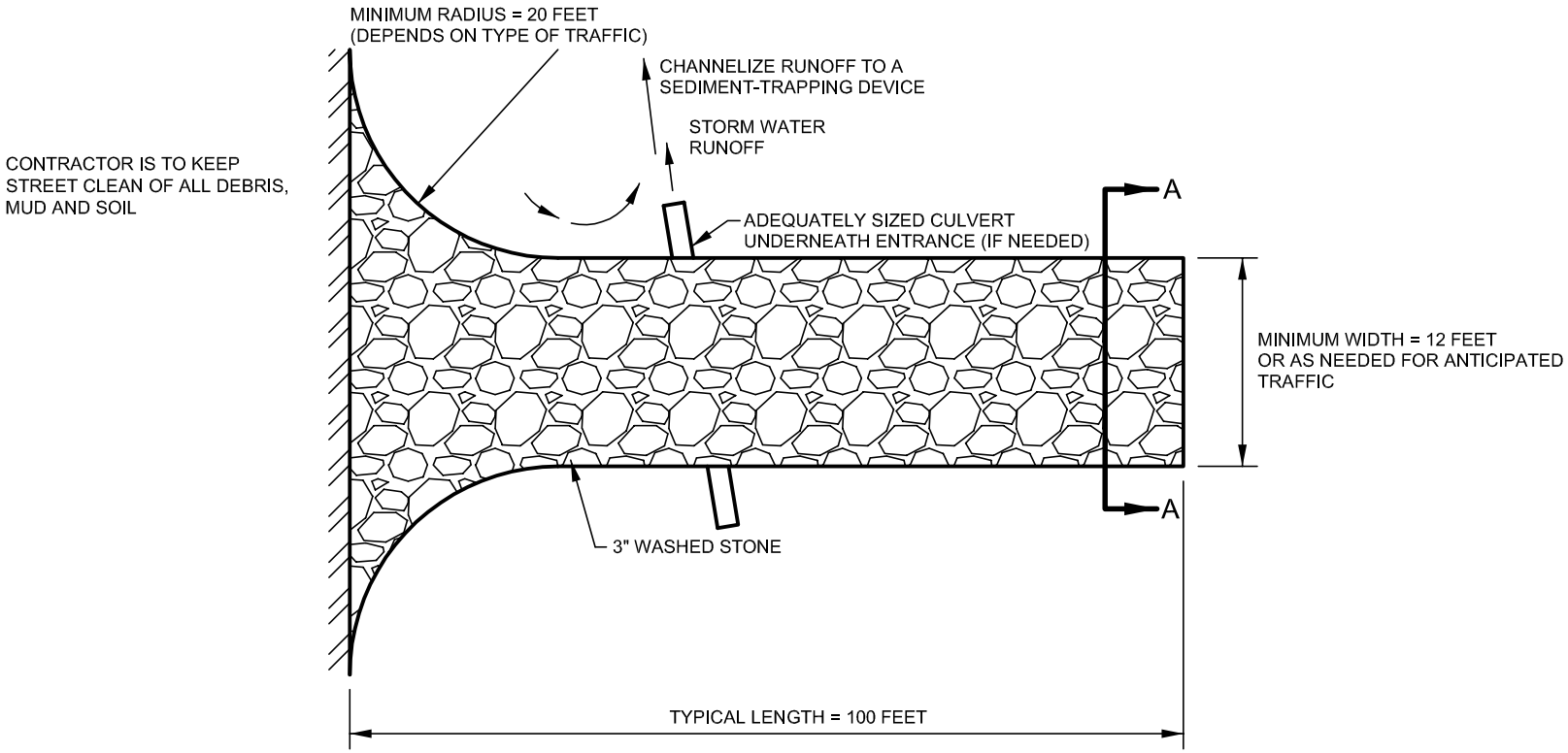

CITY OF COLUMBIA TENNESSEE

CONSTRUCTION ACCESS

(NTS)

DATE
4-23-2012

DWG. NO.
ES-01

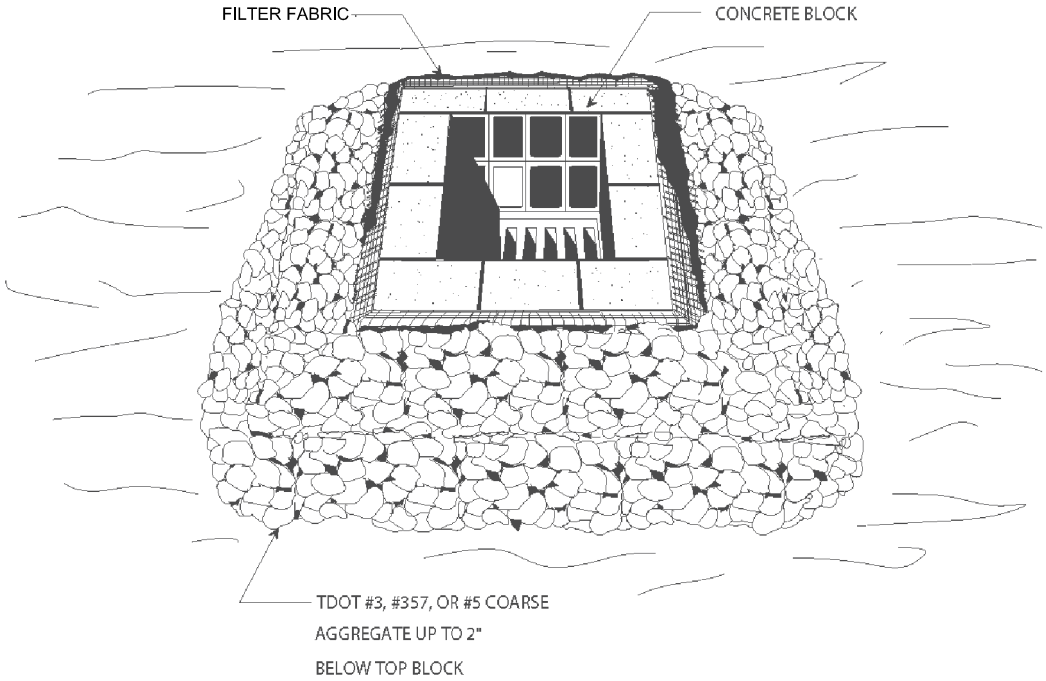

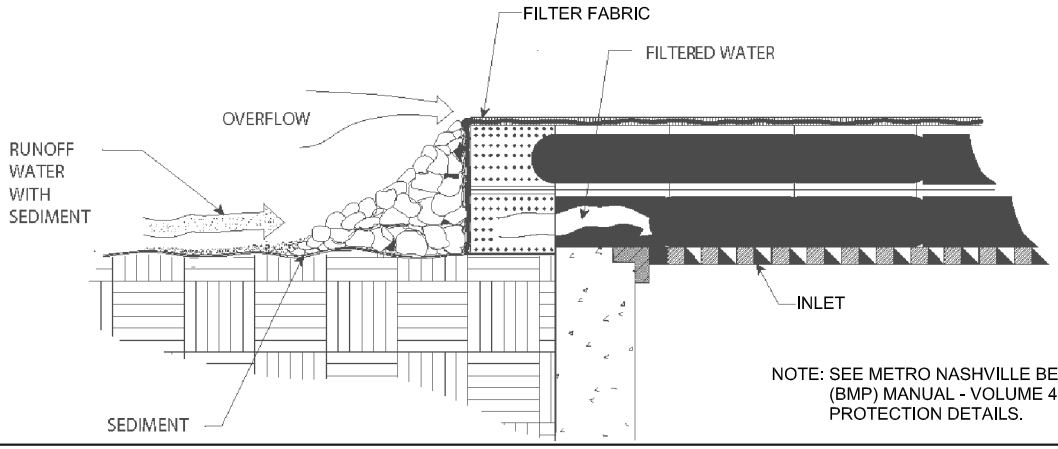

NOTE: SEE METRO NASHVILLE BEST MANAGEMENT PRACTICES (BMP) MANUAL - VOLUME 4 FOR COMPLETE INLET PROTECTION DETAILS.

CITY OF COLUMBIA TENNESSEE

INLET PROTECTION

(NTS)

DATE
4-23-2012

DWG. NO.
ES-02

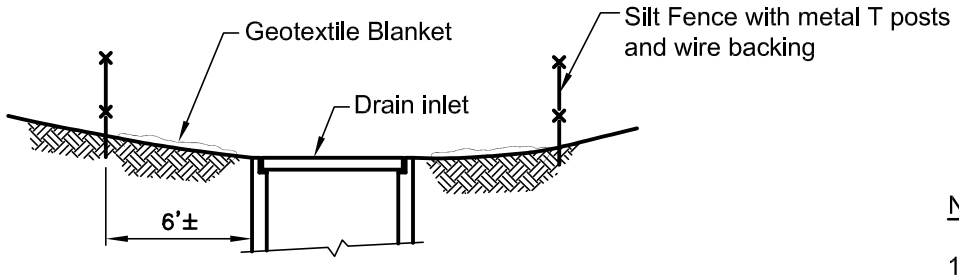

SECTION A-A

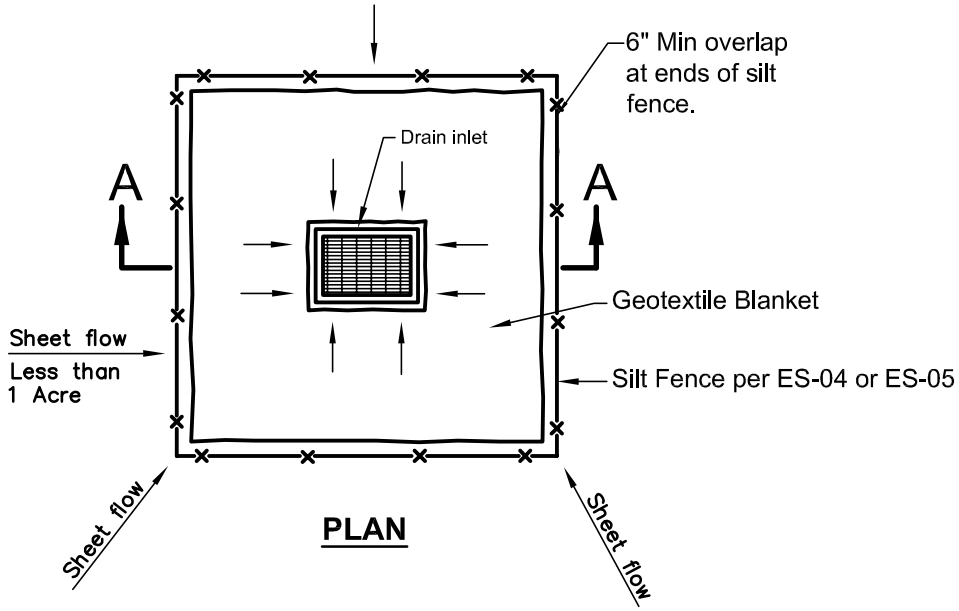

PLAN

Notes:

1. For use in areas where grading has been completed and final soil stabilization and seeding are pending.
2. Not applicable in paved areas.
3. Not applicable with concentrated flows.

CITY OF COLUMBIA TENNESSEE

AREA DRAIN INLET PROTECTION

(NTS)

DATE
4-23-2012

DWG. NO.
ES-03

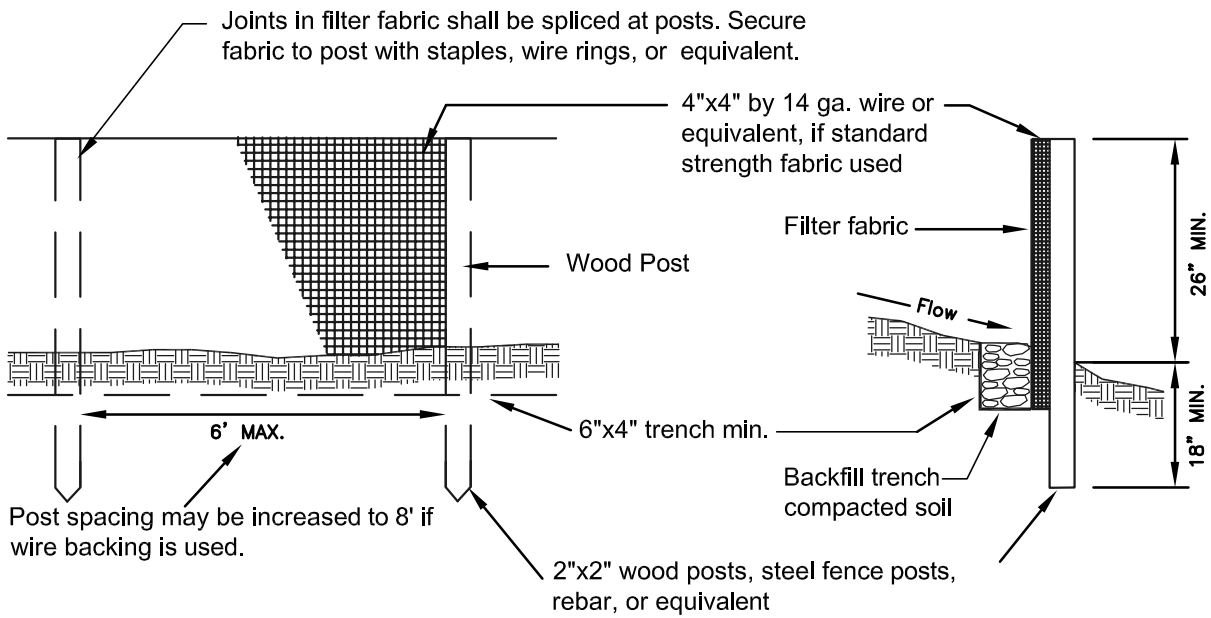

ELEVATION
Not to Scale

SECTION
Not to Scale

Notes:

1.Silt fencing is used to intercept small amounts of sediment and reduce velocity from sheet flow only.

2. Static Slicing is the preferred method of installation and involves the insertion of a narrow cutting blade, placed at the specified anchor depth and simultaneously filling the fence fabric into the trench as the trench is being excavated.

3. Filter fabric fences shall be installed along ground contour with the end of the row turned upslope.

4. Maintenance shall be preformed as needed: Sediment shall be removed from behind the silt fence when it has accumulated to 1/3 the original height of the structure or if bulges develop in the silt fencing.

CITY OF COLUMBIA TENNESSEE

SILTATION CONTROL FENCE

(NTS)

DATE
4-23-2012

DWG. NO.
ES-04

NOTES:

1) This detail is to be used along creeks, streams, rivers and wet weather conveyances .

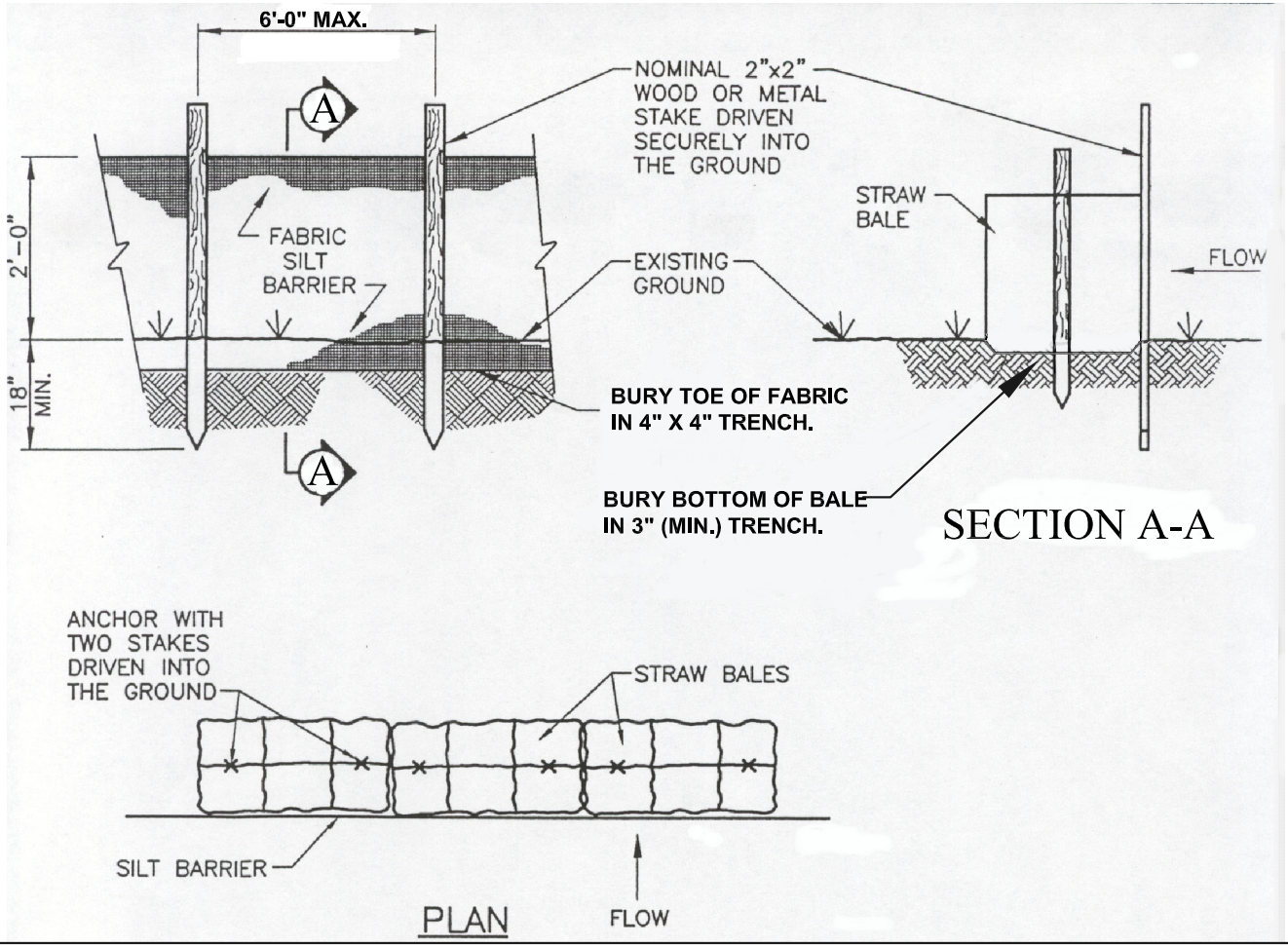

CITY OF COLUMBIA TENNESSEE

COMBINATION SILTATION BARRIER

(NTS)

DATE 4-23-2012

DWG. NO. ES-05

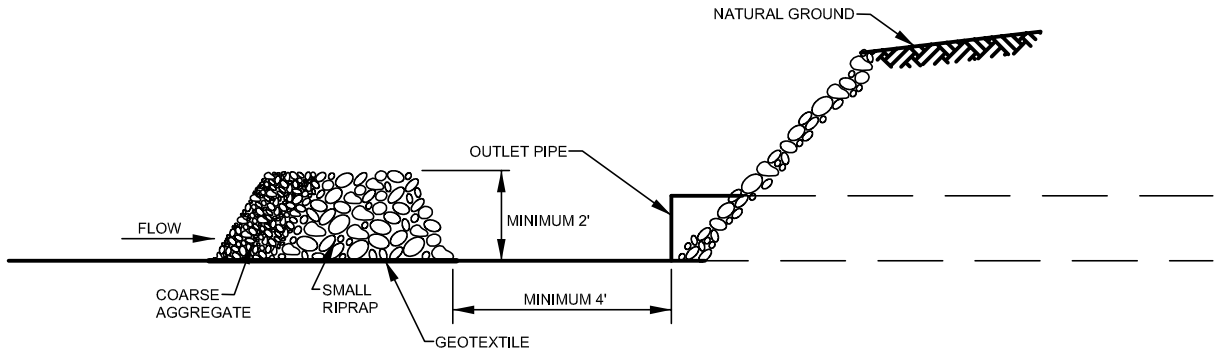

CROSS-SECTION

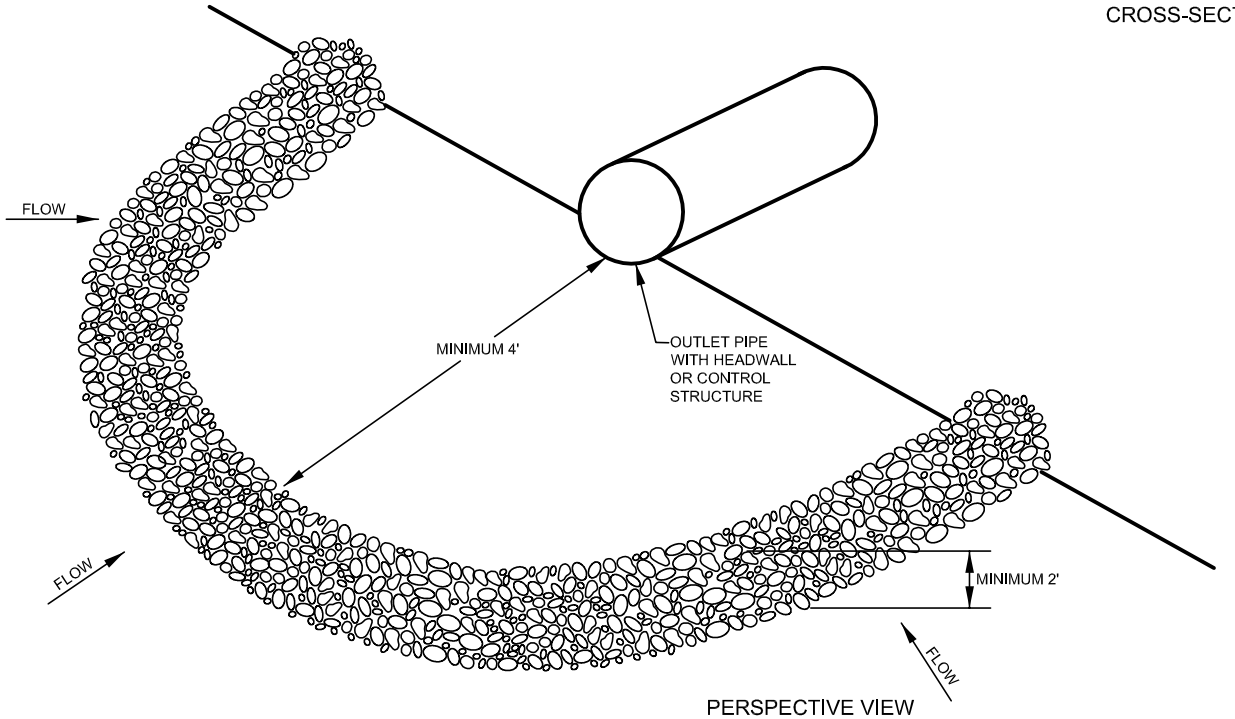

PERSPECTIVE VIEW

CITY OF COLUMBIA TENNESSEE

STONE FILTER RING

(NTS)

DATE
4-23-2012

DWG. NO.
ES-06

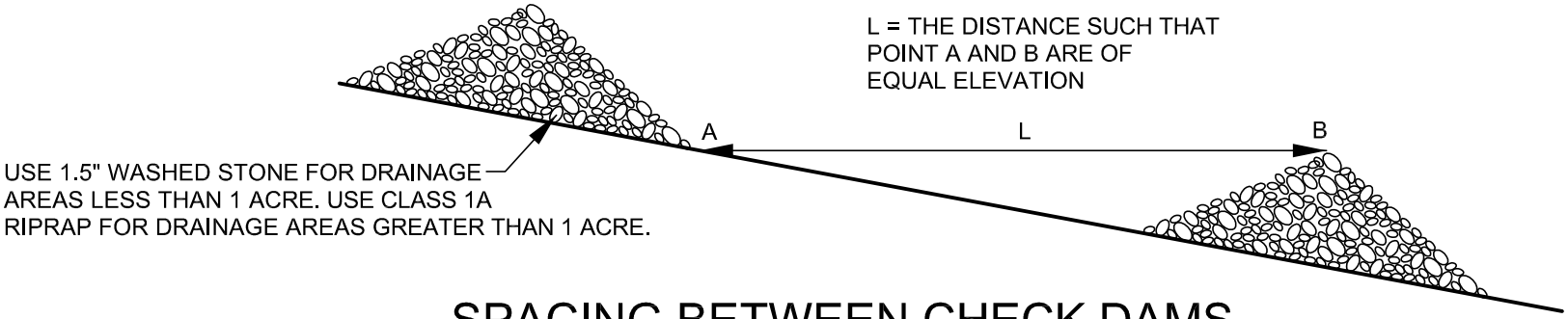

SPACING BETWEEN CHECK DAMS

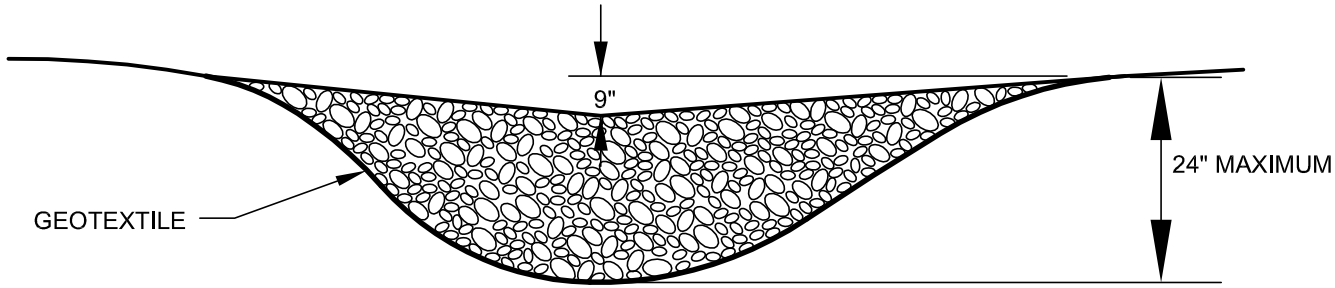

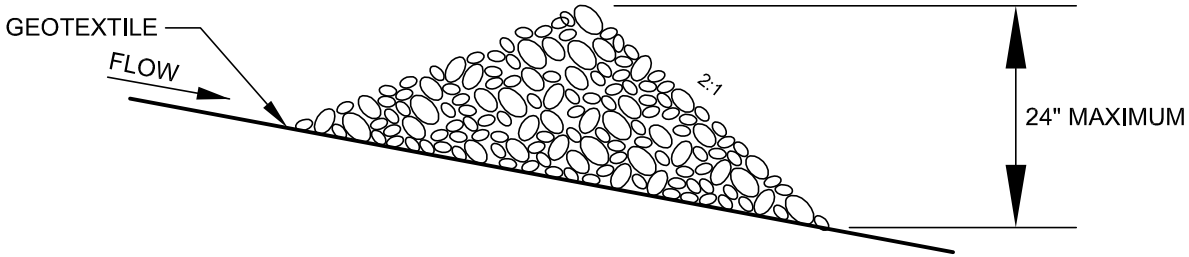

HEIGHT OF CHECK DAMS

CITY OF COLUMBIA TENNESSEE

CHECK DAM DETAIL

(NTS)

DATE
4-23-2012

DWG. NO.
ES-07

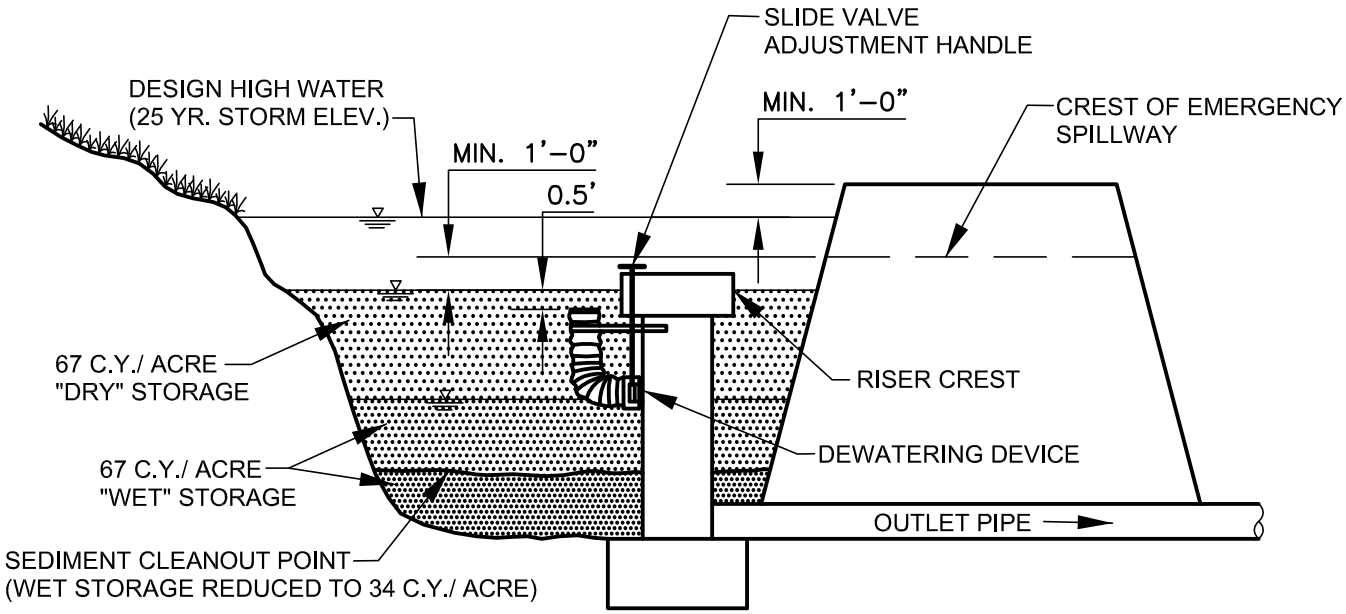

NOTE: SEE TDEC EROSION AND SEDIMENT CONTROL HANDBOOK FOR COMPLETE DETAILS AND DESIGN STANDARDS

CITY OF COLUMBIA TENNESSEE

SEDIMENT BASIN DETAIL

(NTS)

DATE
4-23-2012

DWG. NO.
ES-08

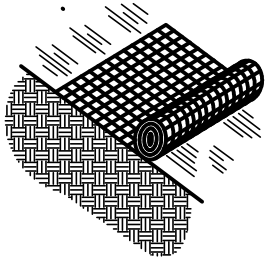

ANCHOR SLOT: BURY UP-CHANNEL END OF THE NET IN 12" DEEP TRENCH. TAMP THE SOIL FIRMLY. STAPLE AT 12" INTERVALS ACROSS THE NET.

ANCHORING ENDS AT STRUCTURES: PLACE THE ENDS OF THE NET IN A 12" SLOT ON THE UP-CHANNEL SIDE OF THE STRUCTURE. FILL THE TRENCH AND TAMP FIRMLY. ROLL THE NET UP THE CHANNEL. PLACE STAPLES AT 12" INTERVALS ALONG THE ANCHOR END OF THE NET.

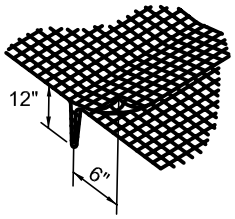

JOINING STRIPS: INSERT THE NEW ROLL OF NET IN A TRENCH, AS WITH THE ANCHOR SLOT. OVERLAP THE UP-CHANNEL END OF THE PREVIOUS ROLL 18" AND TURN THE END OF THE PREVIOUS ROLL, JUST BELOW THE ANCHOR SLOT, LEAVING 6" OVERLAP.

ON SHALLOW SLOPES, STRIPS OF NETTING MAY BE APPLIED ACROSS THE SLOPE.

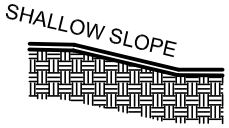

SECTION

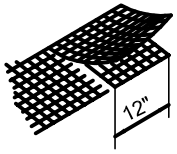

ON STEEP SLOPES, APPLY STRIPS OF NETTINNG PARALLEL TO THE DIRECTION OF FLOW AND ANCHOR SECURELY.

OVERLAP: OVERLAP THE EDGES OF THE STRIPS AT LEAST 4". STAPLE EVERY 12" DOWN THE CENTER OF THE STRIP.

SECTION

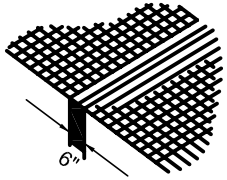

CHECK SLOTS: ON ERODIBLE SOILS OR STEEP SLOPES CHECK SLOTS SHOULD BE MADE EVERY 15 FEET. INSERT A FOLD OF THE NET INTO A 6" TRENCH AND TAMP FIRMLY. STAPLE AT 12" INTERVALS ACROSS THE NET. LAY THE NET SMOOTHLY ON THE SURFACE OF THE SOIL - DO NOT STRETCH THE NET, AND DO NOT ALLOW WRINKLES.

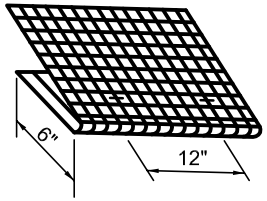

BRING NETTING DOWN TO A LEVEL BEFORE TERMINATING THE INSTALLATION. TURN THE END UNDER 6" AND STAPLE AT 12" INTERVALS.

BERM

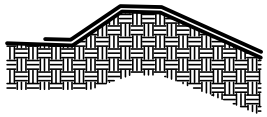

WHERE THERE IS A BERM AT THE TOP OF THE SLOPE, BRING THE MATTING OVER THE BERM AND ANCHOR IT BEHIND THE BERM WITH A 12" ANCHOR TRENCH.

DESIGN ENGINEER TO SPECIFY TYPE OF BLANKET/MATTING TO BE USED.

CITY OF COLUMBIA TENNESSEE

SLOPE STABILIZATION

(NTS)

DATE
4-23-2012

DWG. NO.
ES-09

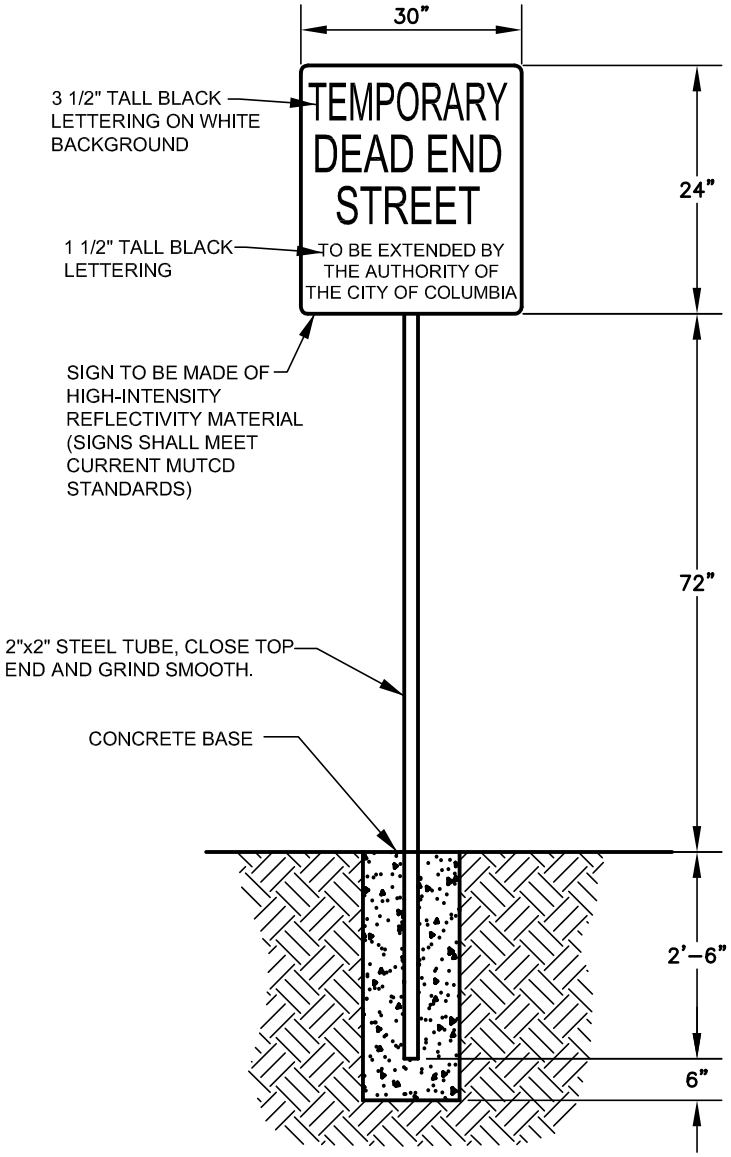

CITY OF COLUMBIA TENNESSEE

STREET CONTINUATION SIGN

(NTS)

DATE
4-23-2012

DWG. NO.
MD-01

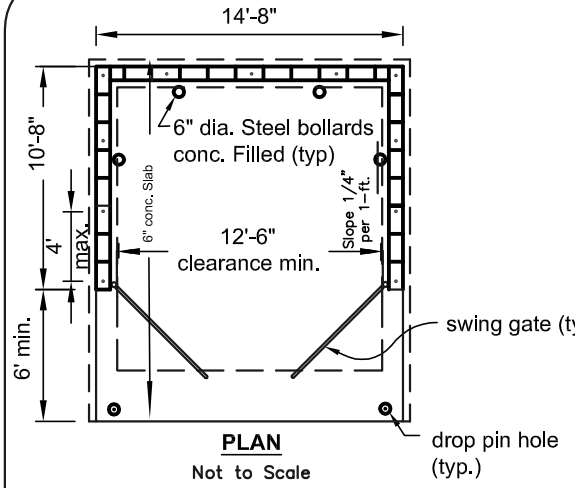

PLAN

Not to Scale

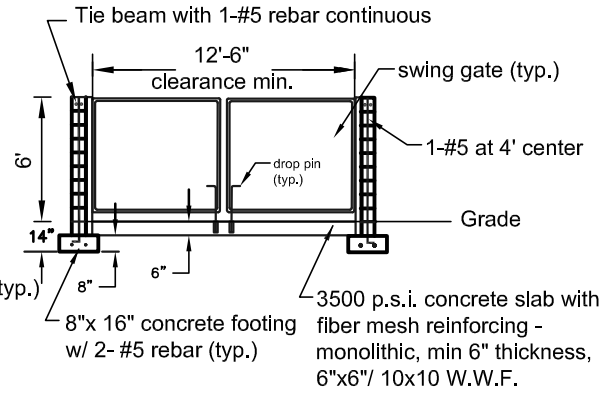

ELEVATION

Not to Scale

General Notes:

1. Materials, construction and quantity control of masonry shall be in accordance with International Building Code (IBC).
2. Materials used should be consistent with those used in the construction of and architectural style of the principal building.
3. CONCRETE SLAB: Monolithic, min. 6" thickness w/imbedded 6"x6"/ 10x10 welded wire fabric (W.W.F.), 3500 P.S.I. with fiber mesh reinforcing.
4. CONCRETE FILLED CELLS: With 1-#5 vertical rebar tied to footer steel at each corner and every 4' O.C.
5. GATES: Constructed of min. 1-1/2" diameter galvanized tubular steel w/privacy-type slats inserted in galvanized steel mesh fabric, hinge-mounted on min. 3" diameter galvanized steel post. (Gates and post constructed and installed per applicable building code by licensed fence contractor).
6. DROP PIN: 1/2" dia. 18" long metal rod gate latch. Provide 3/4" dia. hole 6" into concrete for rods. In asphalt provide a 3/4" P.V.C. sleeve, 6" long, or equal.
7. SOIL:Soil bearing capacity to be at least 2,500 P.S.F.
8. BOLLARD: 3'-6" high, 6" diameter steel pipe bollard filled with concrete, painted traffic yellow, imbedded 3'-0" deep in 18" concrete foundation.

CONCRETE MASONRY WALL CONSTRUCTION

Materials, construction and quantity control of masonry shall be in accordance with International Building Code (IBC). General conditions and construction requirements shall be applied as specified in the IBC during grouted masonry work.

1. All reinforcing steel shall be deformed bars conforming to ASTM A-615, Grade 60. Vertical reinforcement shall be placed in the center of the masonry cell, and shall be held in position at the top and bottom.
2. If a slab dowel does not line-up with a vertical core, it shall not be sloped more than one horizontal in six verticals (1:6).
3. Horizontal wall reinforcement shall be standard truss type DUR-O-WALL (or equivalent) at 16" o.c.
4. Hollow Load-bearing Concrete Masonry Units shall be normal weight conforming to ASTM C-90, with a minimum compressive strength of 1,900 PSI.
5. Mortar shall be type M or S, in accordance with ASTM C-270. Place all masonry in running bond with 3/8" mortar joints. Provide complete coverage face shell mortar bedding, horizontal and vertical.
6. Coarse grout shall conform to ASTM C-476, with a maximum aggregate size of 3/8", 8" to 10" slump, and a minimum compressive strength of 2,500 PSI at 28 days.
7. Minimum 3" X 3" clean-out holes (saw-cut) are required at the bottom course of all cells to verify grout placement. Clean-outs shall be sealed after masonry inspection-provided in accordance with ACI 531-4.6, and before grouting.
8. Prior to grouting, the grout space shall be clean, with no mortar projections greater the ½", mortar droppings or other foreign material. All cells shall be in vertical alignment, and shall solidly be filled with coarse grout as specified.
9. During placing, grout shall be consolidated with flexible cable vibrator. First grout pour shall be stopped a minimum of 1 - 1/2" below the top of the middle bond beam masonry.

CITY OF COLUMBIA TENNESSEE

DUMPSTER PAD & ENCLOSURE

(NTS)

DATE
4-23-2012

DWG. NO.
MD-02

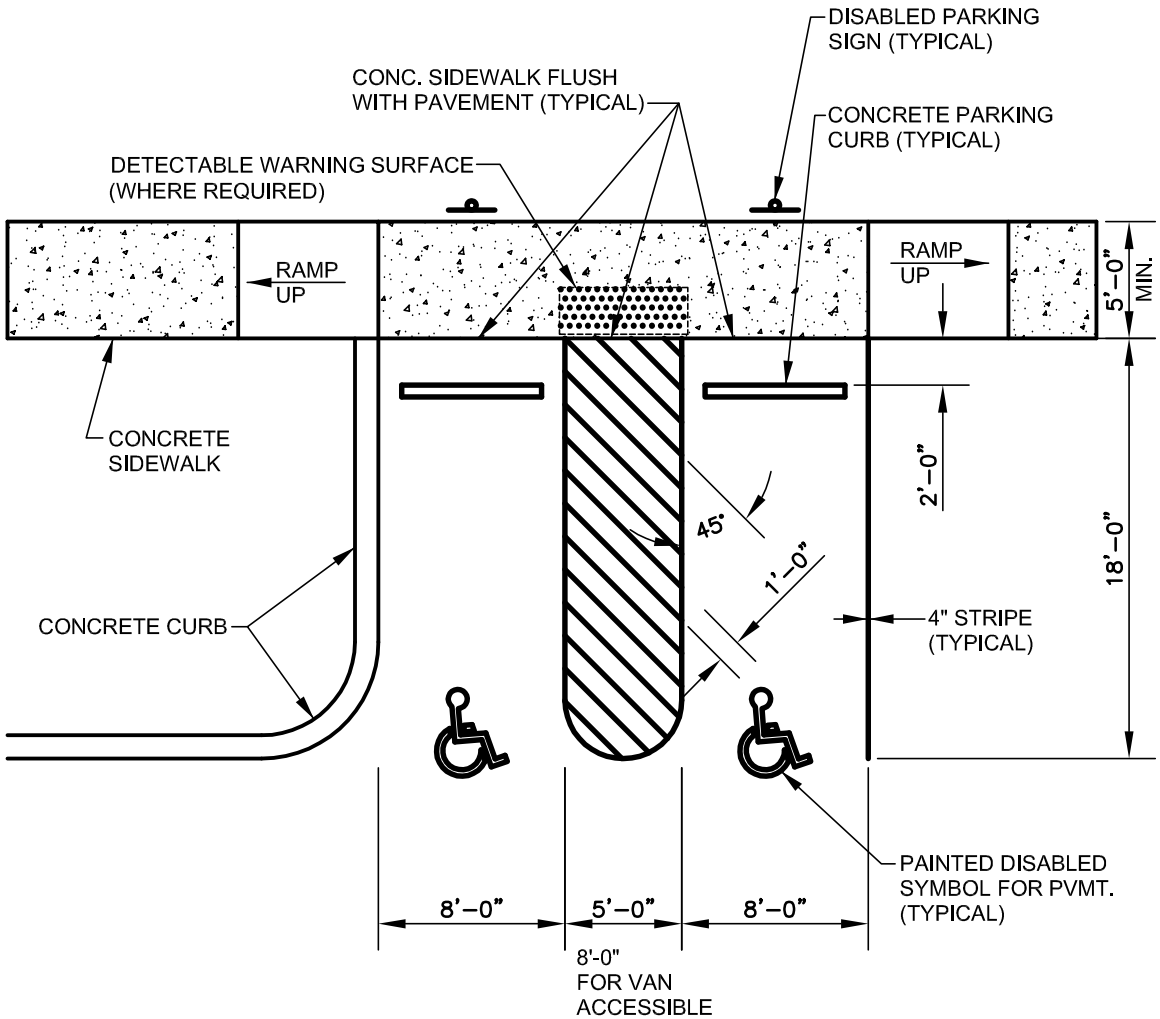

NOTE:
ALL HANDICAP ACCESIBLE PARKING SPACES, RAMPS, SIGNAGE, AND MARKINGS SHALL MEET CURRENT ADA REQUIREMENTS.

CITY OF COLUMBIA TENNESSEE

HANDICAP PARKING & RAMP

(NTS)

DATE
4-23-2012

DWG. NO.
MD-03

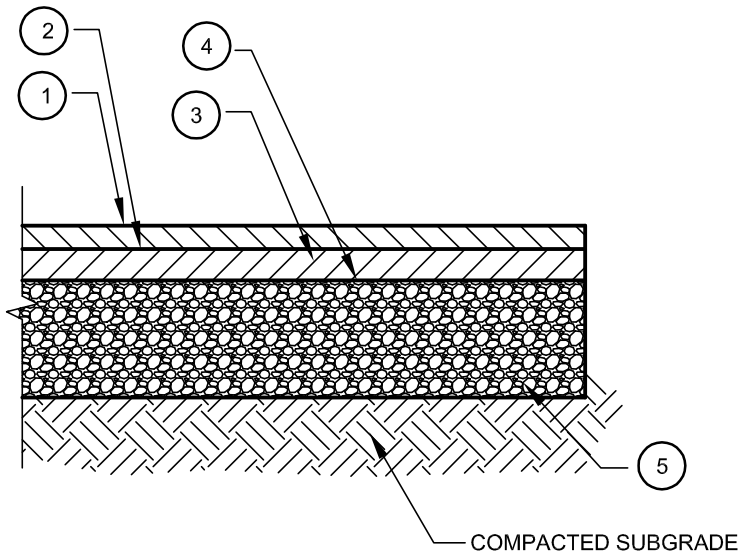

MINIMUM STANDARDS

1. 1 1/2" ASPHALTIC CONCRETE SURFACE (GRADING E) ITEM NO. 411-01.11
2. TACK COAT (RS-2) ITEM NO. 403-01
3. 2" ASPHALTIC CONCRETE BASE (GRADING B) ITEM NO. 307-01.06
4. PRIME COAT (AE-P) ITEM NO. 402-01
5. 6" STONE (GRADING D PUG MILL MIX) ITEM NO. 303-01

ITEM NUMBERS ARE TO MEET TDOT SPECIFICATIONS

CITY OF COLUMBIA TENNESSEE

PARKING LOT PAVEMENT SECTION

(NTS)

DATE
4-23-2012

DWG. NO.
MD-04

Letter size measured in inches.	Distance from public way measured in feet
4"	113'
6"	150'
9"	300'
12"	395'
14"	440'
18"	560'
24"	750'
36"	1130'
48"	1500'
72"	2230'
96"	3000'

1. Property address shall be issued by the Engineering Department at the time the building permit is issued.

2. New and existing buildings shall have approved address numbers, building numbers, or approved building identification placed in a position plainly legible and visible from the street or road fronting the property. These numbers shall contrast with their background. Address numbers shall be Arabic numerals or alphabet letters. Numbers shall be a minimum of 4 inches (102 m) high with a minimum stroke width of 0.5 inch (12.7mm).

3. All commercial structures shall be addressed in accordance with the latest edition of the International Building Code that is adopted by The City of Columbia.

4. All residential structures shall have the property address posted on the structure and both sides of the mail box if it exists.

5. Under extenuating circumstances the City of Columbia may alter/change existing addresses in order to ensure the safety and well being of the citizens of Columbia.

CITY OF COLUMBIA TENNESSEE

PROPERTY ADDRESSES

(NTS)

DATE
4-23-2012

DWG. NO.
MD-05

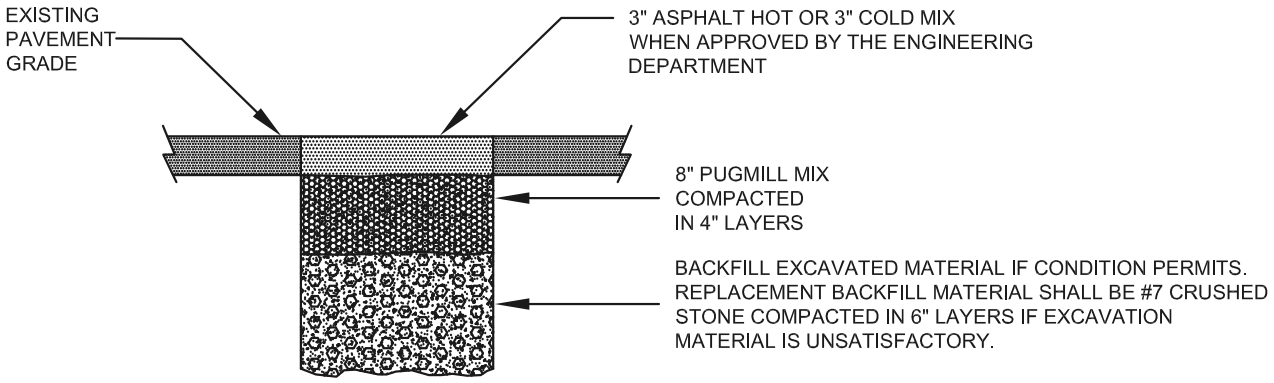

DRAWING 1 TEMPORARY PATCH

DRAWING 2 PERMANENT PATCH

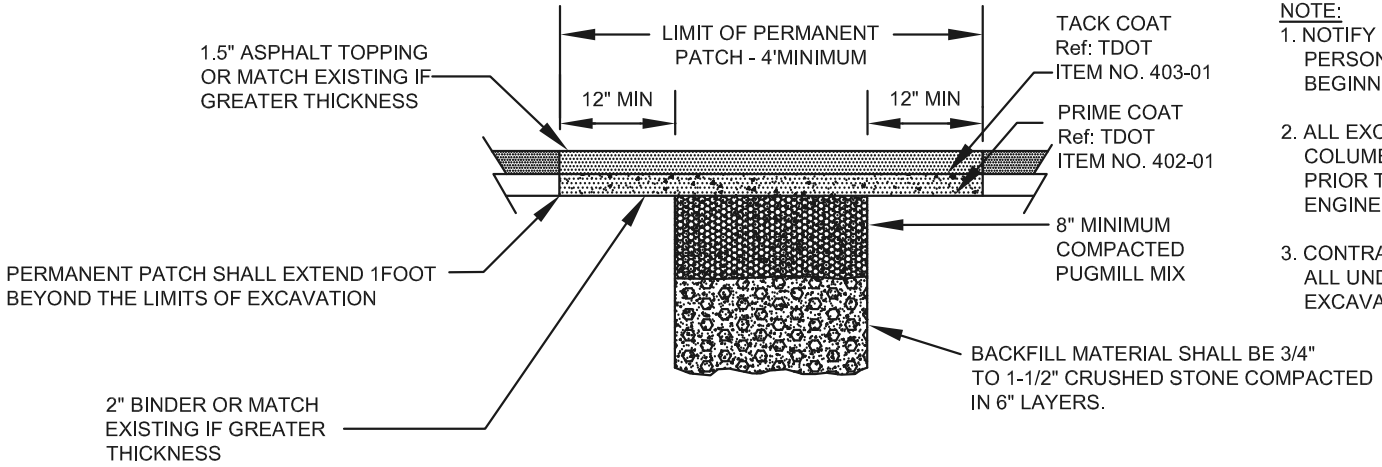

NOTE:

1. NOTIFY ENGINEERING DEPARTMENT INSPECTION PERSONNEL AT LEAST ONE (1) DAY PRIOR TO BEGINNING WORK.
2. ALL EXCAVATIONS MADE WITHIN THE CITY OF COLUMBIA RIGHT-OF-WAY REQUIRE A PERMIT PRIOR TO BEGINNING WORK. CONTACT THE ENGINEERING DEPARTMENT AT 931-560-1530
3. CONTRACTOR IS RESPONSIBLE FOR CONTACTING ALL UNDERGROUND UTILITIES PRIOR TO ANY EXCAVATION WORK.

CITY OF COLUMBIA TENNESSEE

STREET CUT REPAIR

(NTS)

DATE
4-23-2012

DWG. NO.
MD-06

CITY OF
COLUMBIA
TENNESSEE

TYPICAL SUBDIVISION ENTRANCE FEATURE

(NTS)

DATE
4-23-2012

DWG. NO.
PD-01

TYPICAL CITY OF COLUMBIA STANDARD IS DARK GREEN MAST ARM AND SIGNAL POLE WITH BLACK SIGNAL BACKGROUND

CITY OF COLUMBIA TENNESSEE

MAST ARM FOR TRAFFIC SIGNALS

(NTS)

DATE
4-23-2012

DWG. NO.
PD-02

CITY OF
COLUMBIA
TENNESSEE

STANDARD STREET LIGHT

(NTS)

DATE
4-23-2012

DWG. NO.
PD-03

CITY OF
COLUMBIA
TENNESSEE

TYPICAL MAIL BOX

(NTS)

DATE
4-23-2012

DWG. NO.
PD-04

CITY OF
COLUMBIA
TENNESSEE

TYPICAL STOP SIGN

(NTS)

DATE
4-23-2012

DWG. NO.
PD-05